



Assembly Order

The SimFab Modular Cockpit "Rotorcraft Edition" package consists of several individually packaged modules (configurations). Install each module in the following order and refer to its dedicated assembly manual where applicable. Scannable QR codes are located on each kit's soft packaging or box flap backing.

Seat Base Preparation

1.1 If you are installing the optional Armrest Kit, place its adapter plates between the seat sliding rails and the seat risers before bolting them down. The plates must be captured during this step — they cannot be added later without removing the risers.

1.2 Install the Seat Lift Kit (seat risers) onto the seat sliding rails.
The kit is packed inside the seat frame at the bottom of the box.

⚠ Follow the instructions in the Seat Lift Kit assembly manual.

2. Install the seat backrest to the seat base.

3. Install the optional seat frame rear extensions or EZ rolling wheel kit.

4. If installing the Armrest Kit, complete the remaining armrest assembly now that the risers and seat frame are in place.

⚠ Follow the instructions in the Armrest Kit assembly manual.

⚠ **Do not sit in the seat until either the rudder pedal plate with pedals is installed at the front, or the seat frame rear extensions are installed at the back. Without one of these, the seat can tip over backwards — especially with the backrest reclined.**

5. Install Flight Sim Configuration #4 — Rudder Plate Assembly.

6. Install Flight Sim Configuration #6 or the FFB Retrofit Kit — Center Control Lower Mount Bracket.

7. Install Flight Sim Configuration #11 — Collective Bracket.

8. Install any remaining optional configurations or add-on accessories.

Additional products and accessories are available at SimFab.com, SimFab.eu, and Amazon.com.

* Seat Frame Installation
* Seat Lift Kit (Spacers) installation
* Seat assembly

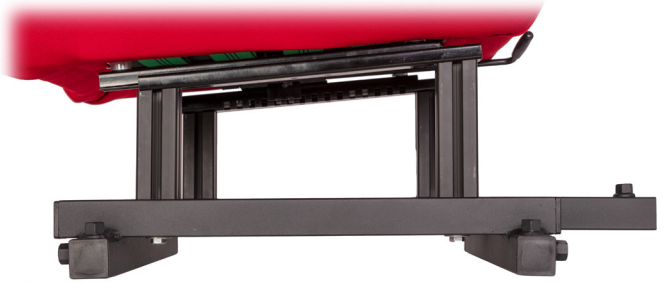



Assembly instruction manuals available at:

http://bit.ly/ow-manuals

V1 DCS 081623

by SimFab®

WARNINGS:

Proceed with caution and extra attention when warning signs are present during installation instructions manual.

WARNING

Choking hazard, small parts. Not for children under 5 years old.



WARNING

Keep hands and fingers clear of pinching points, and hinging metal parts.

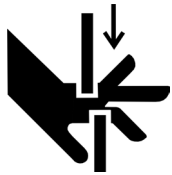

If your item is damaged, defective or missing parts, please contact us first directly at Email: info@SimFab.com or
Toll Free: 1-888-299-2746

As the manufacturer, our knowledge of your new product ensures that we will be able to assist you promptly and accurately.

For invoices and other price information, please refer to your market place account for more details. Alternatively, you can always email us at info@SimFab.com

Parts List

1. Seat with removable foam insert
2. Floor felt pads
3. Seat frame

4. Seat lift kit with seat frame hardware

4.1. Seat rails side bolts (pre-mounted to seat risers) (4)

4.2. Frame side bolts (4)

4.3. Frame side washers (4)

7. Wrenches (included in parts kit box, inside tool pouch)

⚠ Refer to kit box with parts and assembly manuals for each add-on kit


1


2

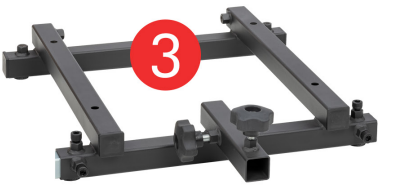
3


4




5


6


7


8

Seat Lift Kit (Spacers) Installation

Parts and tools included in the kit:

4x seat frame spacers (2x short/rear and 2x long/front)
4x spacer bolts (pre-installed)
4x seat frame hardware (bolts and washers)



Fig. 9

• Note: Spacers are cut at angle to provide 5 degrees seat tilt. Therefore, each pair spacers have specific front/rear side and top/bottom direction to seat/frame. Refer to labels on each spacer.

1. Remove pre-screwed bolts (shorter bolts) from spacers and use them to mount spacers to the rails.
2. Slide seat rails all the way to forward position.



Fig. 10

3. Install longer spacers to front rails by holding the spacer bolts with one hand and screw on the spacer to the bolt with the other hand.

* Leave spacers loose on the bolts in order to align them with the frame at later step.



Fig. 11



Fig. 12

• Front spacers should point out with stickers forward as shown.

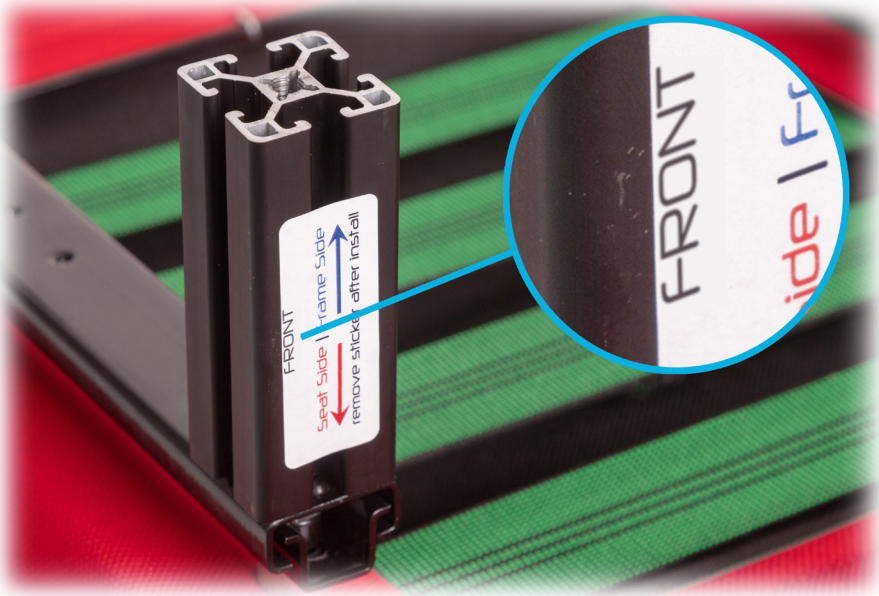

Fig. 13

4. Slide the rails all the way to rear position and install the rear spacers same way as front ones.

• Rear spacers are shorter than front and stickers should point backwards as shown.

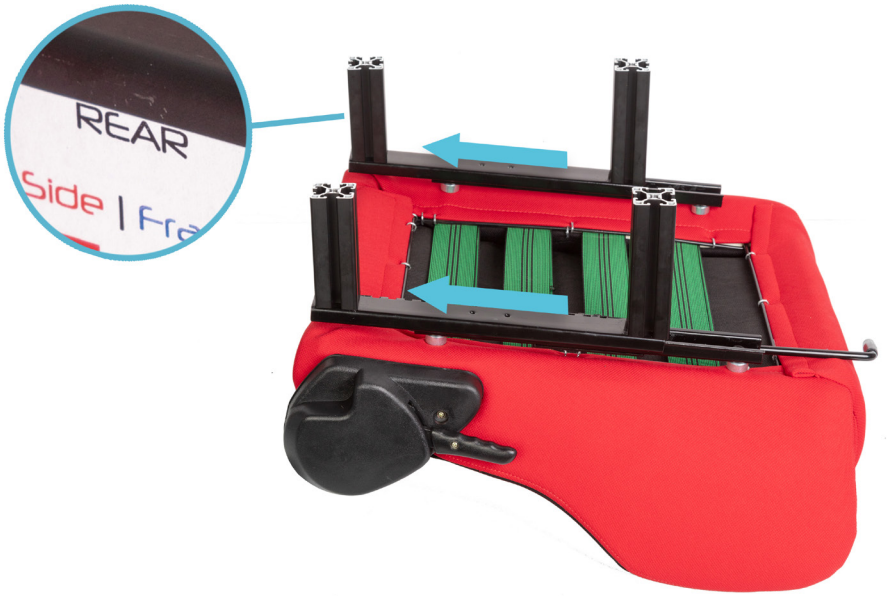

Fig. 14

5. Place seat frame on top of the spacers and align the frame holes to match with spacers holes.

6. Mount seat frame with original (longer) bolts and washers to the spacers by hand.

* Leave bolts loose in order to align them with the frame, after all four are bolted on.



Fig.15



Fig.16

7. Align spacers at correct direction, square with frame.



Fig.17

8. While holding each spacer straight with the frame, tighten up the frame bolts with the 13-flat wrench.



Fig.18

9. Use the close end of 13-flat wrench to tighten spacers bolts. First rear ones. Slide rails all the way forward and tighten front ones.



Fig.19

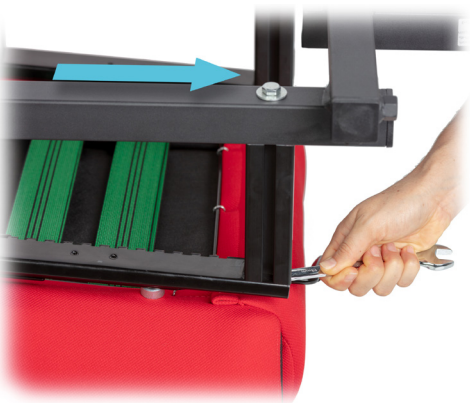

Fig.20

10. If manual gear shifter is used on side of the cockpit: flip lower “L” bracket with longer arm pointing up and shorter arm going into the seat frame. Adjust upper L bracket accordingly to level the shifter with the raised racing seat.

11. Flip racing seat with side up, make final adjustments and tighten up all knobs and bolts.



Fig.21

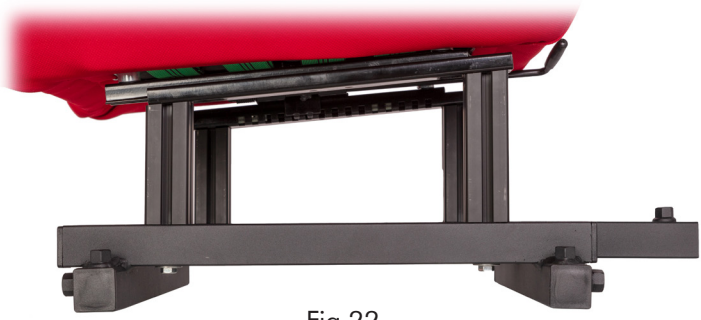

Fig.22

Seat installation

Attach felt pads to each corner of seat base frame. Align each pad with welded nuts, towards the end of frame tube as shown.



Fig.1

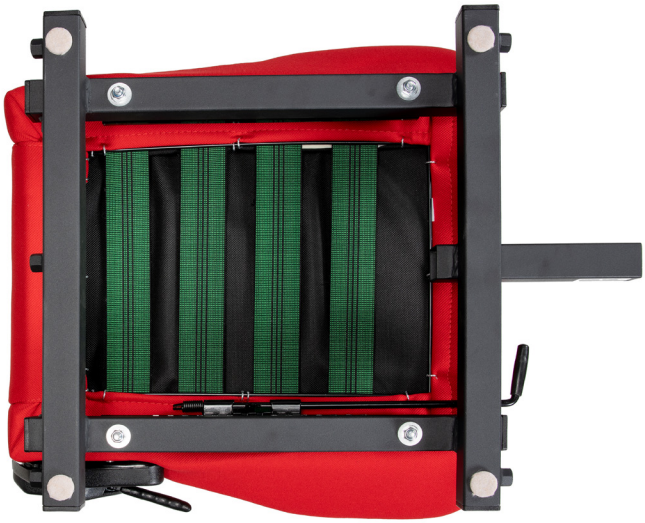

Fig.2

2. Seat Assembly

• Remove pre-screwed pair of bolts on left side of the backrest and bolt on right side of the seat.

⚠ Seat base is designed with removable center foam insert for center mounted stick or cyclic use.



Fig.3

Following the correct assembly sequence is critical for proper installation of the seat backrest.

• Align the backrest with the reclining arm on the left side. Install and hand-tighten the hinge bolt on the right side first.
• Align one threaded insert on the left side and hand-tighten the bolt.
• Align the second threaded insert and hand-tighten the bolt.
• Tighten all three bolts using the included tools.



Fig.5

3. “Easy Roll” wheel set or seat frame rear support kit. Insert wheel tube into rear side of seat frame until it bottoms out. Secure tubes with pair of bolts pre-installed to seat frame.



Fig.24

• To move the cockpit around or out of the way, lift front of chassis by the lower support bracket until “Easy Roll” wheels touch the floor.



Fig.25

Flight Simulator Add-on Kit
Configuration #4
Rudder Pedal Plate
Assembly Manual
And
Optional Accessories



Assembly instruction manuals available at:

http://bit.ly/ow-manuals

v3.3 060726

by SimFab®

If your item is damaged, defective or missing parts, please contact us first directly at Email: info@SimFab.com or
Toll Free: 1-888-299-2746

As the manufacturer, our knowledge of your new product ensures that we will be able to assist you promptly and accurately.

For invoices and other price information, please refer to your market place account for more details. Alternatively, you can always email us at info@SimFab.com

WARNINGS:

Proceed with caution and extra attention when warning signs are present during installation instructions manual.





Table of Contents

Parts list.....4
Rudder plate and shaft installation.....6
Rudder pedals installation.....7
Rudder pedals mounting pattern.....8
Specifications, Warranty, Terms and Conditions.....14

Parts list

1. Rudder pedal plate with mounting bracket.
2. Rudder pedal plate shaft.
3. Rudder pedal plate to shaft mounting hardware.
4. Various controls mounting hardware:
   ⚠ All controls mounting bolts are installed upside down except WinWing pedals (bolt heads on floor side).

A. Thrustmaster TFRP, VirPil Torq, WinWing Skywalker

B. Logitech (Saitek)

C. MFG Crosswind

D. VKB T-Rudders Mk.IV

E. TPR, VirPil Ace Interceptor/Collection, Slaw Viper, Turtle Beach Velocity One

5. Vecro strips for rudder pedals not equiped with through holes or inserts. (4)
6. Velcro ties for cable management (6)

⚠ Use wrenches included in base package cockpit.

* 5mm Hex key
* 10mm combo flat wrench
* 13mm combo flat wrench

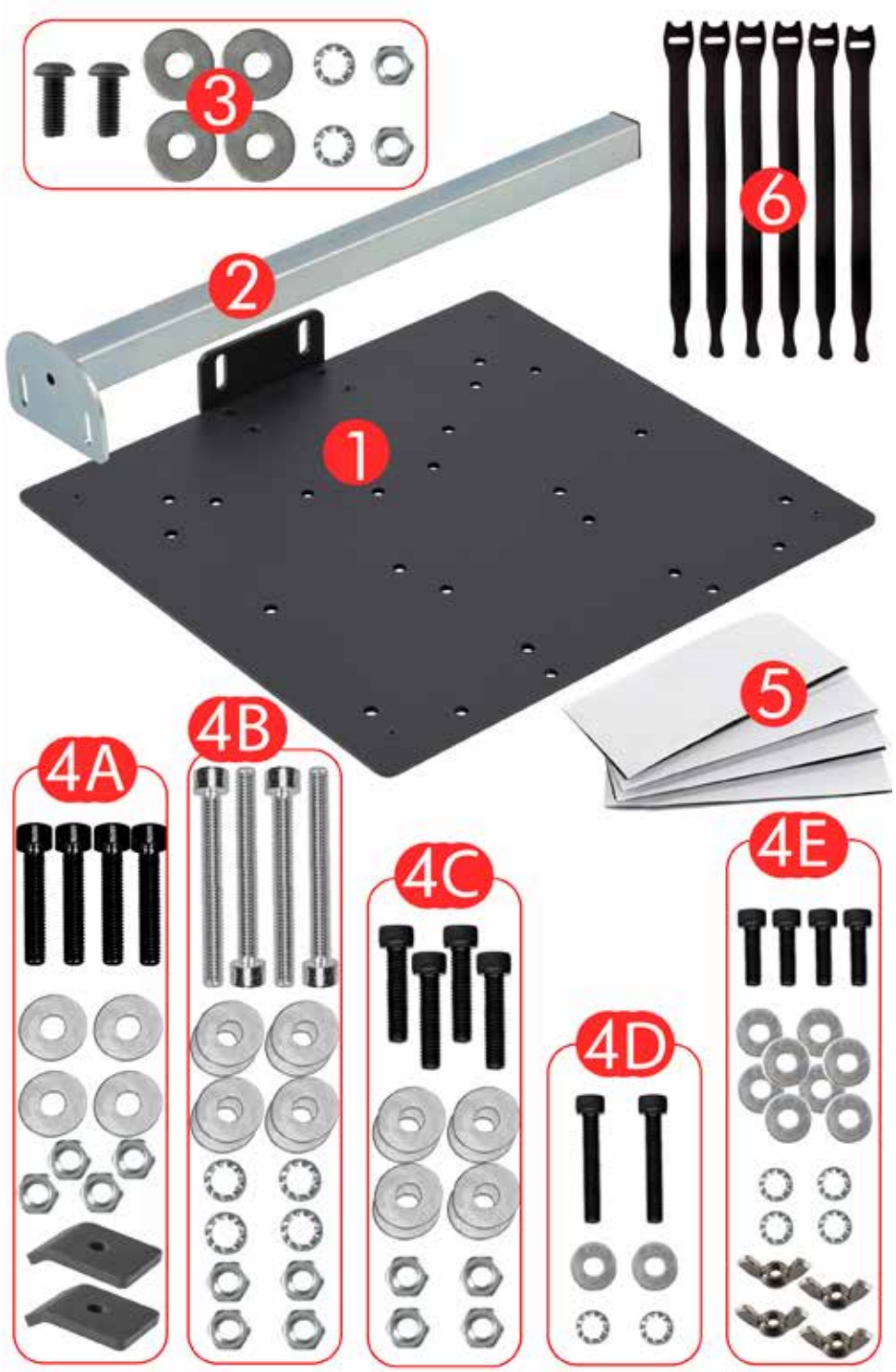

Installation

Pedal plate and shaft assembly

1. Install hardware connecting pedal plate with shaft, leave hardware hand tight.

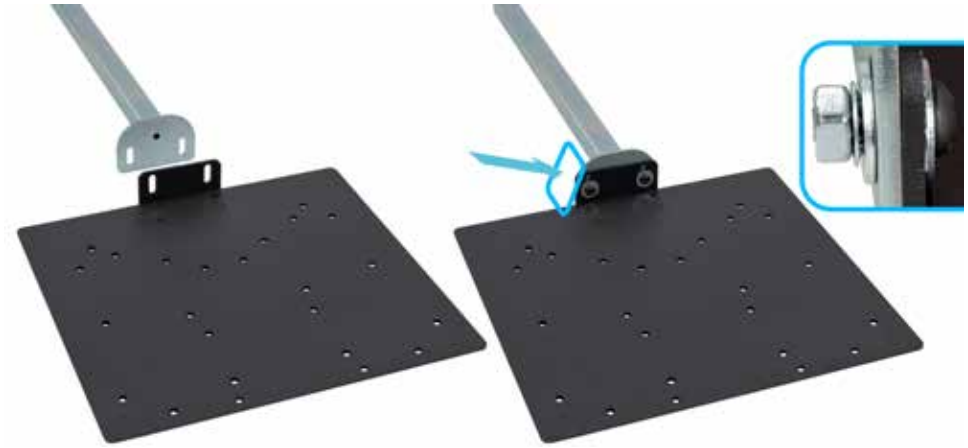

2. Rudder pedal plate assembly to seat frame installation.

A. Slide in shaft to seat frame

B. Tighten quick release knobs

C. Adjust plate to lay flat on floor and tighten plate mounting hardware by using 5mm hex key and 13mm combo wrench.

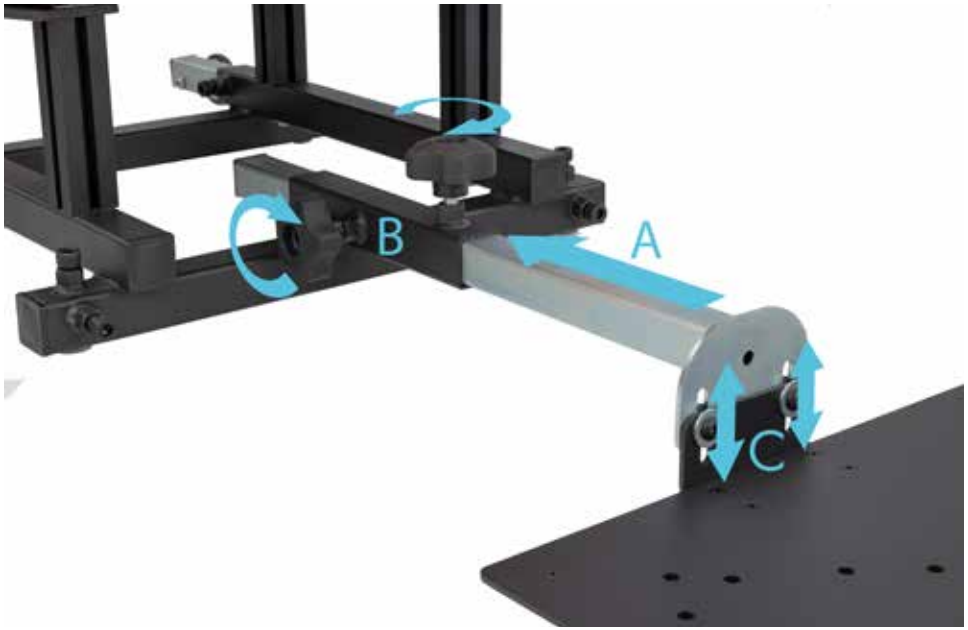



Rudder pedals installation

3. Install controls mounting hardware upside down with bolt heads facing the floor.

⚠All controls (except WinWing rudders) mounting bolts are installed upside down (bolt heads on floor side).

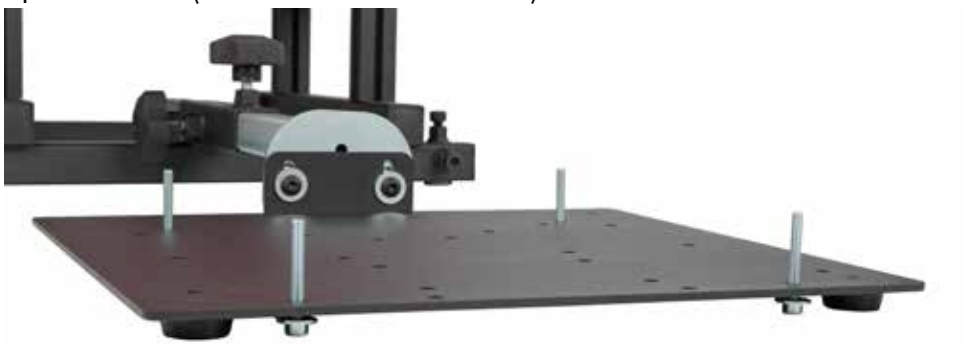



Rudder pedals mounting pattern

1. VirPil Ace Interceptor / Collection
2. Saitek/Logitech
3. Brunner Rudder Brackets
4. ThrustMaster TPR / Moza MRP
5. Honeycomb Charlie Rudder Brackets
6. Slaw Device Viper
7. MFG CrossWind
8. WinWing Skywalker
9. VKB Sim and Turtle Beach Velocity One
10. Virtualfly Ruddo+
11. VKB old
12. VirPil Ace Torq
13. ThrustMaster TFPR

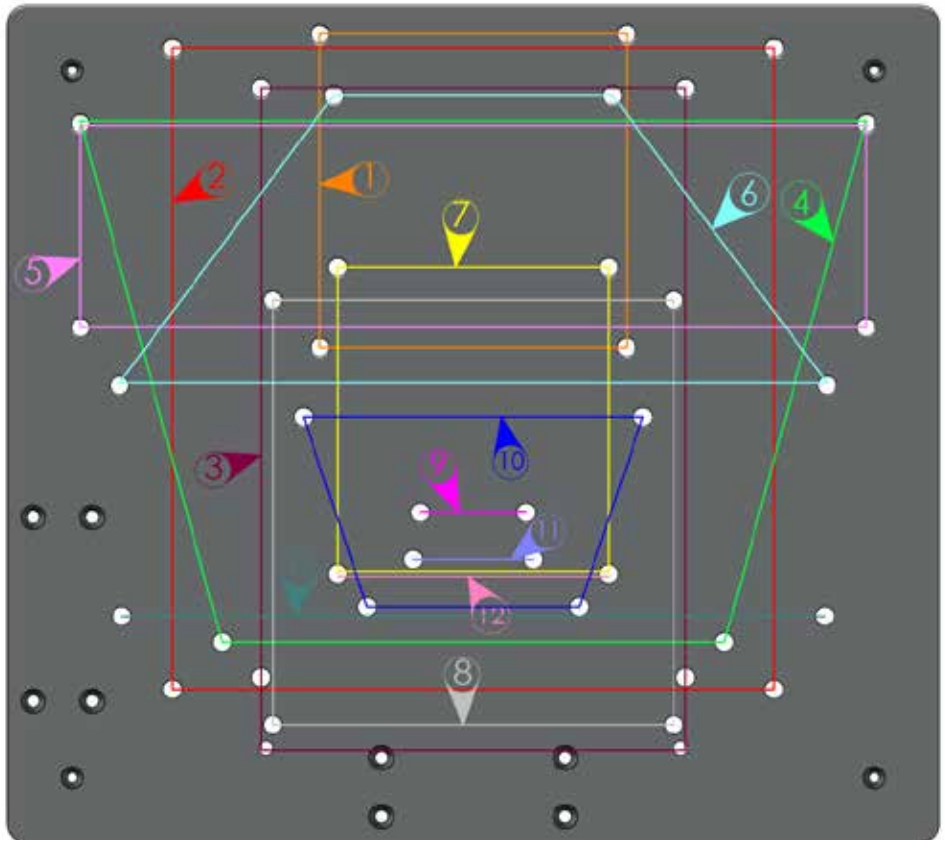

4. Thrustmaster TFPR rudder pedals holding tabs installation.
Align rudder pedals along with plate mounting holes and clamping marks as indicated on pedals.
⚠ Clamping holding tabs elsewhere may damage pedals plastic.





5. VirPil Collection / Interceptor rudder pedals.
⚠ Remove factory base bracket held by four bolts and mount pedals to OpenWheeler rudder pedal plate.



6. VirPil Torq rudder pedals holding tabs installation.
⚠ Use holding tabs and hardware to secure rudder pedals to plate.



7. VKB T-Rudders Mk.IV rudder pedals.
⚠ Remove factory inserts and bolts holding rudder rear feet as shown, and replace them with hardware as labeled through pedal plate.







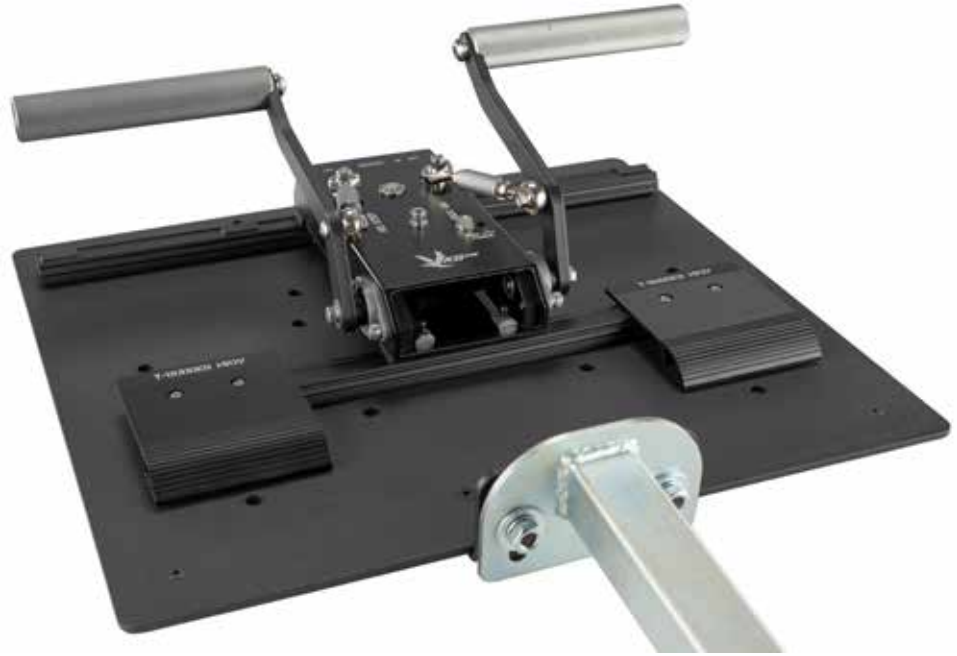

8. WinWing Skywalker (Orion) rudder pedals.
Use rudder kit hardware, bag 4A: 4 bolts M6x25mm, 4 washers, 4 nuts.
⚠ WinWing rudder pedals are the only ones with bolts installed right side up: bolt head top of rudders, washers and nuts bottom of plate.

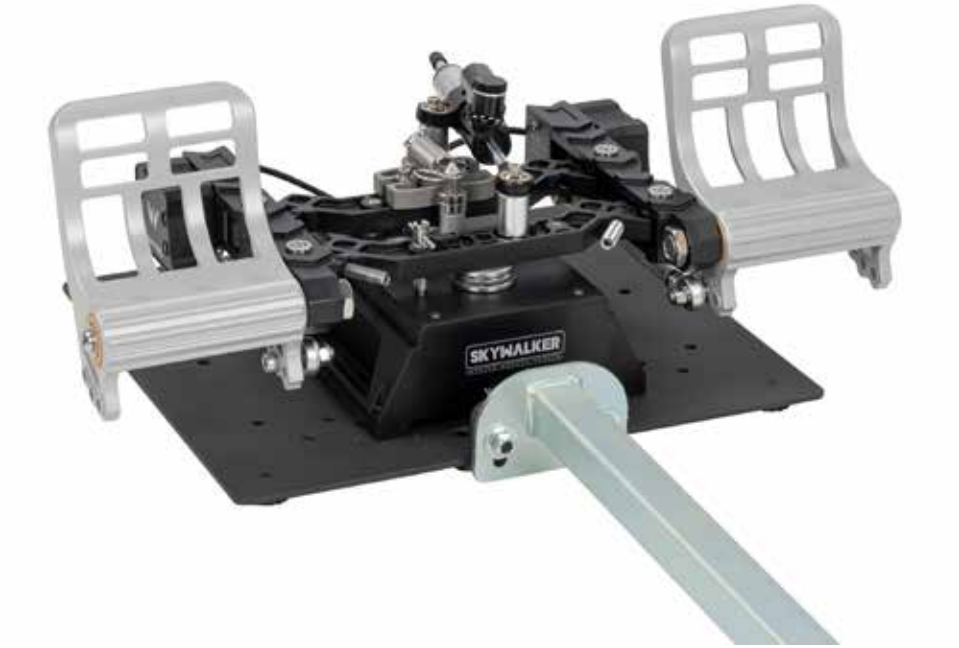

Specifications:

Recliner: max: 170 degrees
Construction: tubular steel frame with elastic strap supports
Seat Materials: high-density cold cure foam filling; Fabric, Steel chassis

Instructions during use and care:

Move simulator around with caution to avoid collision.
Keep out of direct sunlight and outdoor use.
Watch fingers when adjusting recliner.
Placing heavy or sharp objects on the seat may damage the surface material.
Do not use abrasive or chemically aggressive materials on the seat.
Use dry cloth or soft brush to clean the chair.

Dimensions:



Warranty Information

Return Policy

Terms And Conditions

http://homeracer.com/ow-termsandconditions.html



Flight Simulation Add-on Kit

Configuration #6

Centered Flight Stick Lower Mount Bracket

Assembly Manual

And

Add-on Accessories

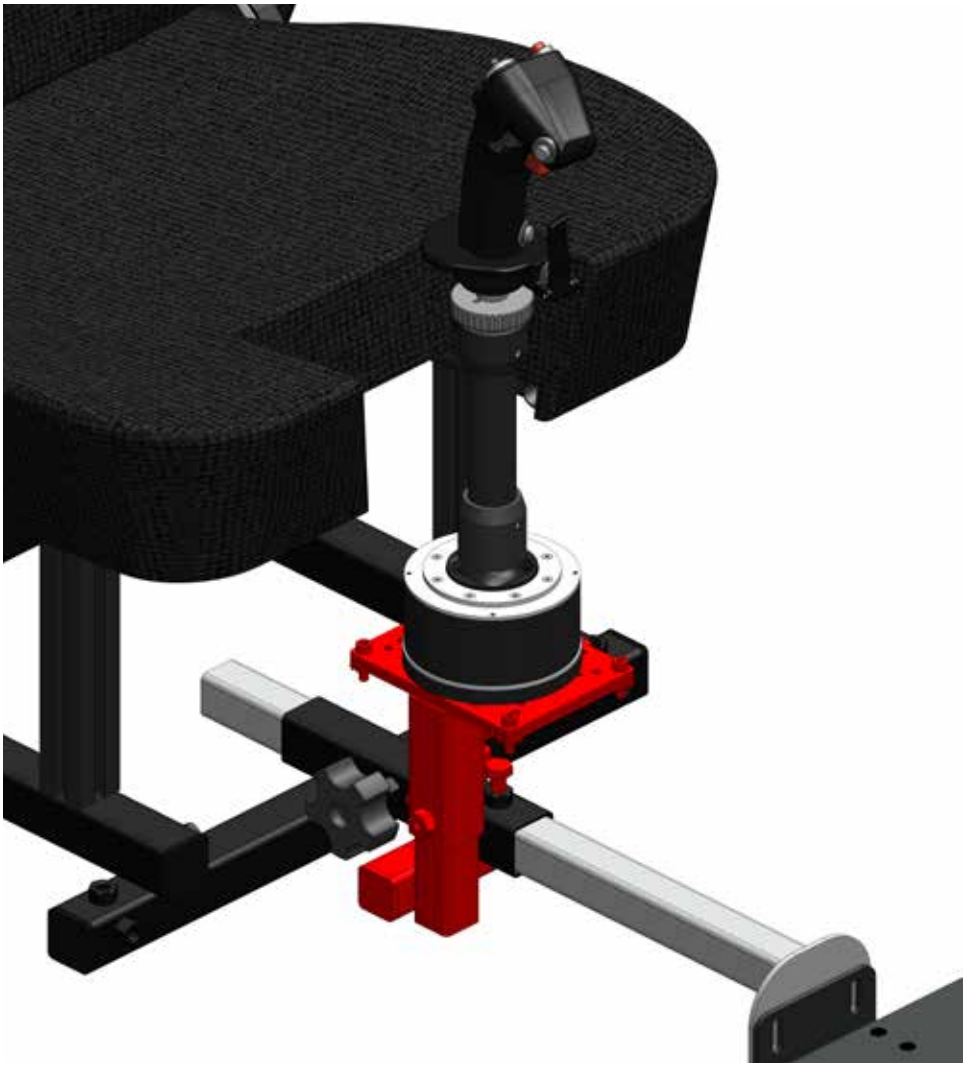

Assembly instruction manuals available at:

http://bit.ly/ow-manuals

V5.2 061226

by SimFab®

WARNINGS:

Proceed with caution and extra attention when warning signs are present during installation instructions manual.

WARNING

Choking hazard, small parts. Not for children under 5 years old.



WARNING

Keep hands and fingers clear of pinching points, and hinging metal parts.



If your item is damaged, defective or missing parts, please contact us first directly at Email: info@SimFab.com or
Toll Free: 1-888-299-2746

As the manufacturer, our knowledge of your new product ensures that we will be able to assist you promptly and accurately.

For invoices and other price information, please refer to your market place account for more details. Alternatively, you can always email us at info@SimFab.com

Table of Contents

SimFab Modular Flight Simulation Concept And Design.....4

Introduction and concept of centered stick lower mount bracket.....5

Bill of parts.....6

Clamping bracket seat frame installation.....9

Lower adapter plate to upper L bracket installation.....11

Upper adapter plate controls mounting pattern.....12

Stick control base to upper adapter plate installation.....13

Mid tube extension install and adjustment.....15

Multiple sticks hot swap.....16

Specifications, Warranty, Terms and Conditions.....18

Explore the Ultimate in Simulation with SimFab: Where Innovation Meets Immersion

At SimFab, we're redefining the world of simulation with our cutting-edge Modular Racing and Flight Sim Concepts and Designs.
Dive into an unparalleled realm of fidelity, realism, and immersion with our bespoke cockpits, meticulously crafted to mirror the intricate layouts of real aircraft and race cars.
We prioritize your comfort, offering modular, fully compatible setups that adapt seamlessly to all major brands and control makers. Starting with affordable yet uncompromised quality base models, our products cater to both novice pilots eager to explore flight simulation and seasoned racers seeking upgradeable, interchangeable designs for a tailored experience.
Join us on a journey where every detail is designed with precision, ensuring a simulation experience that's as thrilling as it is authentic.



Introduction

Centered stick lower mount bracket is dedicated but not limited to the following brands flight sticks with removable grip and ability to add grip extension: Thrustmaster Warthog, VirPil, VKB, WinWing, Moza

⚠Bracket kit is not compatible with FFB stick bases such as Moza AB9 and VPforce Rhino. Search FFB retrofit kit, configuration #15 in our catalog for compatible bracket kit.

- Bracket allows height adjustment as low as 5.5" from floor to base plate with bracket mounted beneath main support tube. With added extension tube (not grip extension), as high as 16.5" from floor to base plate, with bracket mounted over main support tube. Total of 11" height adjustment. Purpose of adjustable flight stick base is allowing precise vertical alignment of stick grip in accordance to seat height and grip extension (if such is installed to the stick).
- Plates are pre-drilled to accommodate the following sticks and stick bases: Thrustmaster Warthog or AVA, all Virpil, VKB Gunfighter, WinWing Orion2 and Super Libra, Moza AB6 (not compatible with AB9).
- Bracket is clamped beneath or over seat frame center tube.





Bill Of Parts

1. Lower clamping bracket
2. Mid extension bracket
3. Upper L bracket
4. Lower adapter plate
5. Upper adapter plate
6. Clamping 3-hole tab

Clamping bracket mounting hardware:

7. M8x80mm button head bolt (2)
8. M8 washer (2)
9. M8 nut (2)

Lower plate to upper L bracket mounting hardware:

10. M6x50mm countersink bolt (2)
11. M6 wide washer (2)
12. M6 tooth washer (2)
13. M6 nut (2)

Upper to lower adapter plate hardware:

14. M6x20mm countersunk bolt (4)

Revision Note:
The socket head zinc-plated bolts connecting upper and lower plates, shown in the illustrations have been replaced with black steel countersunk bolts.
Actual hardware supplied may differ slightly from the illustrations but will function as described in the assembly instructions.

15. M6 flat washer (4)
16. M6 tooth washer (4)
17. M6 nut (4)
18. M10x20mm hex bolt (substitute top quick release knob for clearance)
19. M10x12mm set screws (2)
20. Optional small quick release knobs for “hot swap” or quick removal of top assembly with stick control with upper L bracket (2)

Upper plate to stick base mounting hardware

21. Stick upper plate (stick base cover) to lower plate hardware:

m6x20mm socket bolts (4); washers (4); lock washers (4); nuts (4)

22. Stick mounting hardware:
a) Thrustmaster Warthog, VirPil, VKB sticks mounting hardware: M4x12mm countersink bolts (4); 2.5mm hex key
b) WinWing Super Taurus stick mounting hardware: M6x12mm bolts (4)
c) WinWing Orion2, Moza AB6 mounting hardware: M4x10mm countersink bolts (4)

⚠ For the Moza AB6 stick base, remove (peel off) the factory rubber feet on the front side of the control base (away from the seat) so the base plate can rest flat against the bottom of the stick base. Install the countersunk bolts connecting the upper and lower plates through the upper plate before installing the upper plate onto the AB6 stick base.

23A.  (4)

23B.  (4)

23C.  (4)

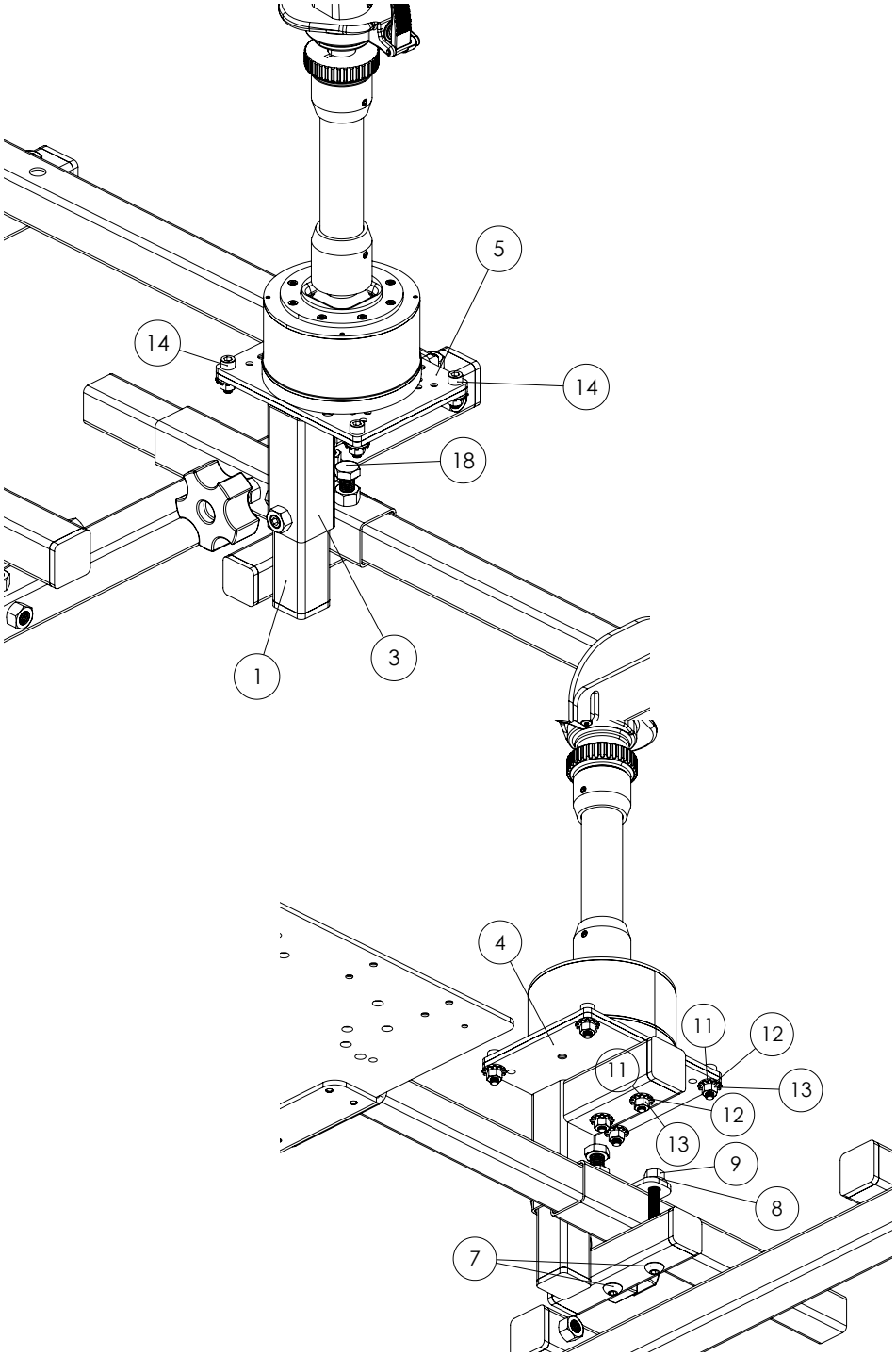

Installation

Option 1: Mount lower bracket beneath tube for lowest height adjustment.

Clamping bolts are mounted upside down.

Replace top mounted knob with supplied bolt for clearance. Use 17mm open wrench to tighten or loosen bolt without removing bracket. Ensure bracket is clamped far enough from side knob to allow knob release if needed.

⚠ Ensure clamping bolts have equal tension and clamping tab lays flat against main support tube. Do not over-tighten bolts to avoid bending 3-hole tab.

⚠ Ensure tab and bracket are square to tube they are clamped on.

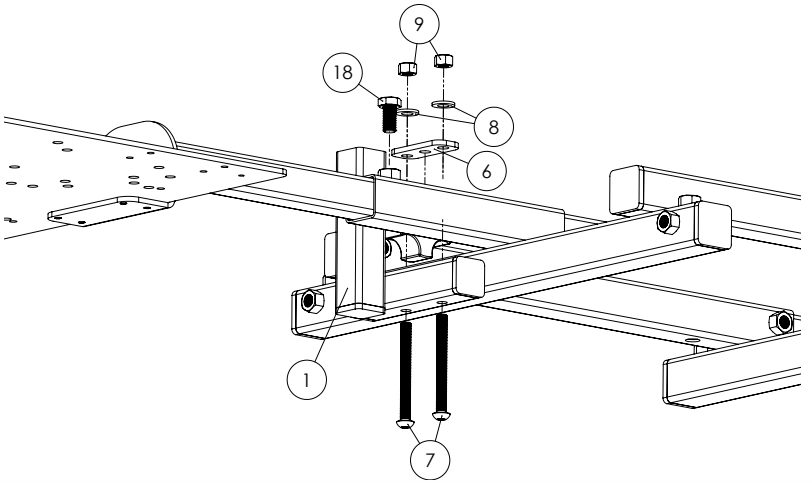

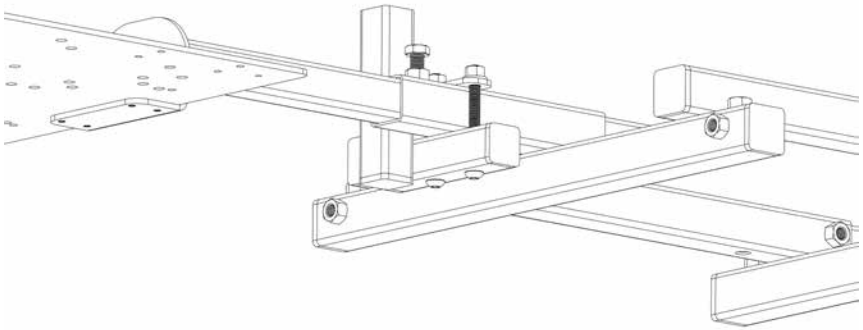

Option 2: Mount lower bracket on top of main support tube for highest height adjustment.

⚠ Clamping bolts are mounted right side up.

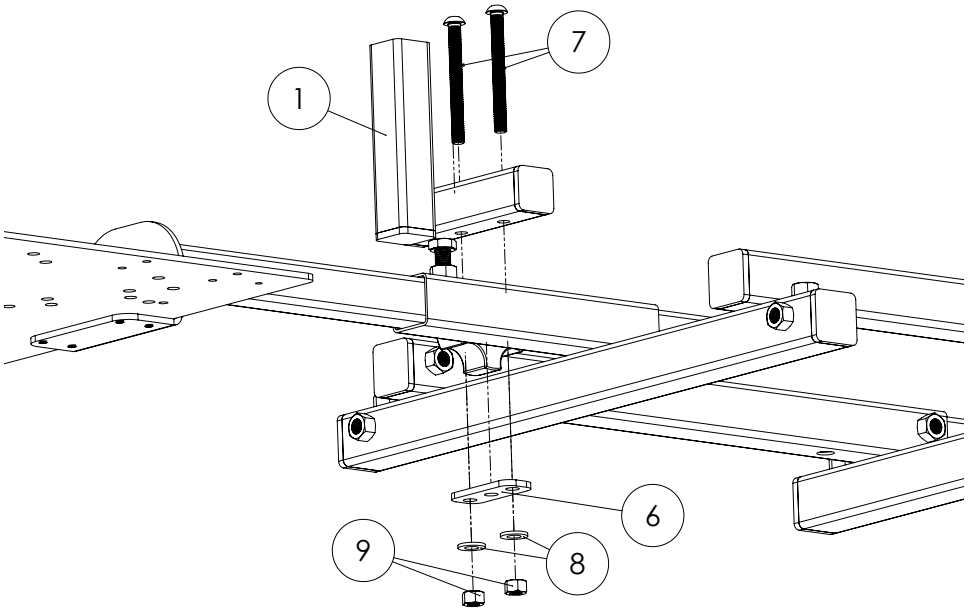

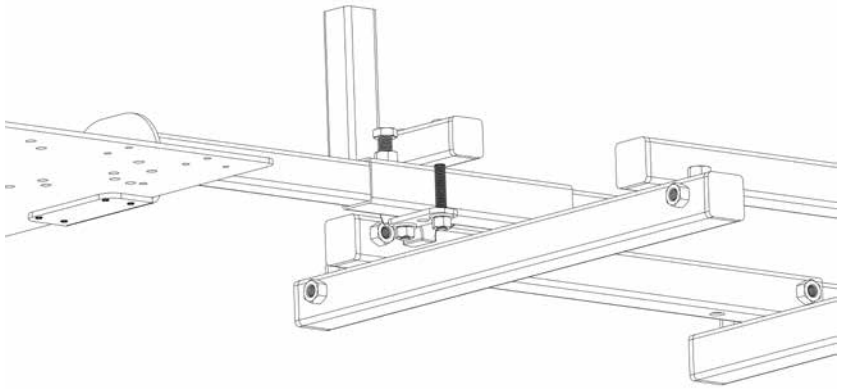

Attach lower adapter plate to the center stick upper L bracket. Depending on control base mounting pattern plate may be installed in either direction.

Use pair of M6x50mm countersink bolts to secure lower plate to bracket.

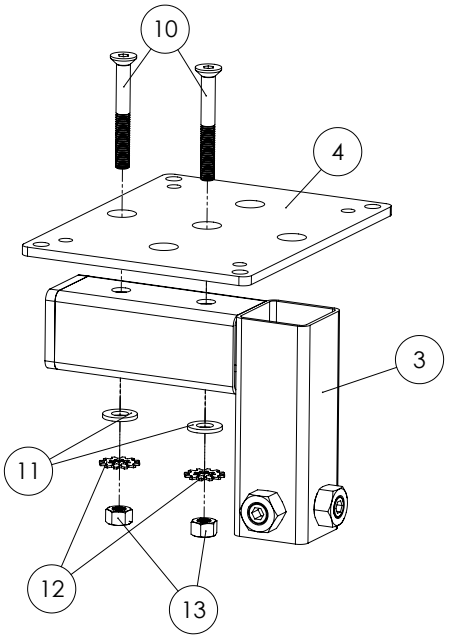

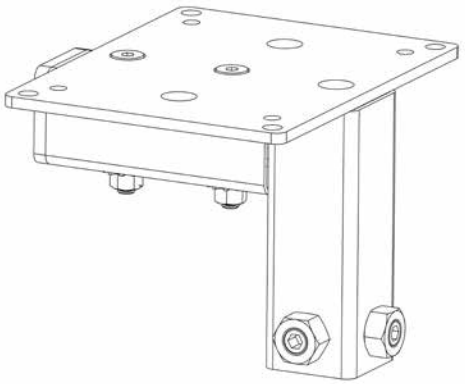

Mounting patterns by brands and models.

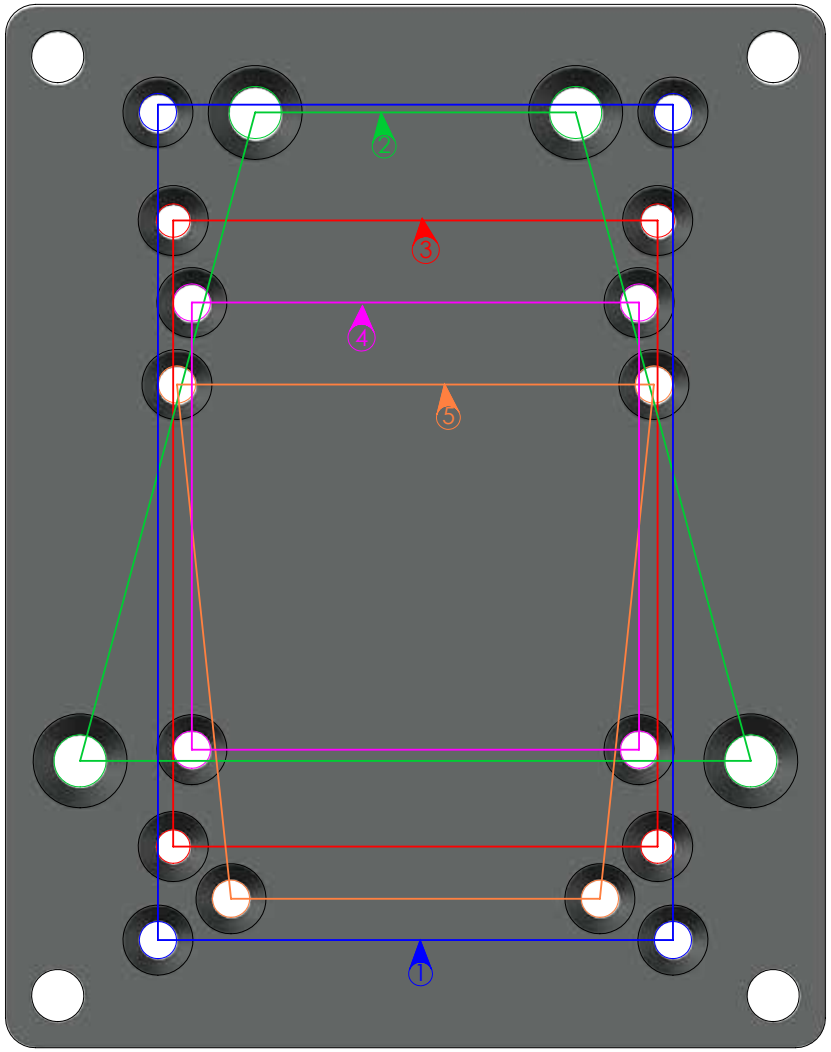

1 Virpil Mongoos
WarBRD

2 WinWing
Super Libra

3 Virpil CDT

4 Thrustmaster Warthog
WinWing Orion2
Moza AB6

5 VKB Gunfighter

Attach upper adapter plate to stick base. Certain controls may require removal of their factory base plate and replacing it with SimFab cover plate. Such control is Thrustmaster Warthog stick base. If threaded inserts on the stick base are exposed and accessible, removal of factory plate is not necessary.

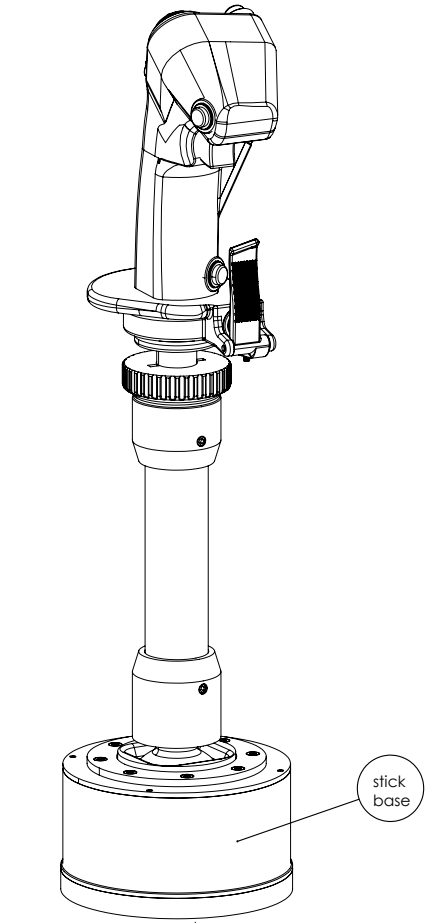

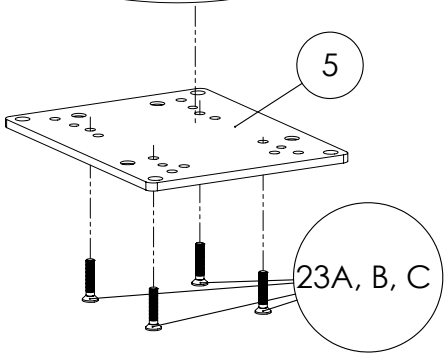

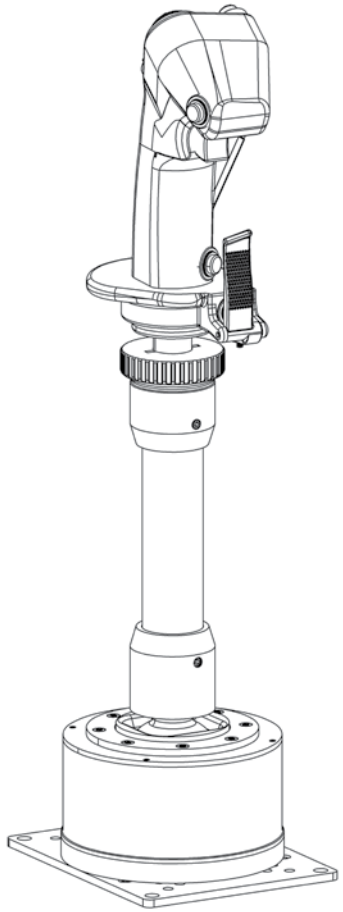

Attach upper to lower plate with provided hardware.

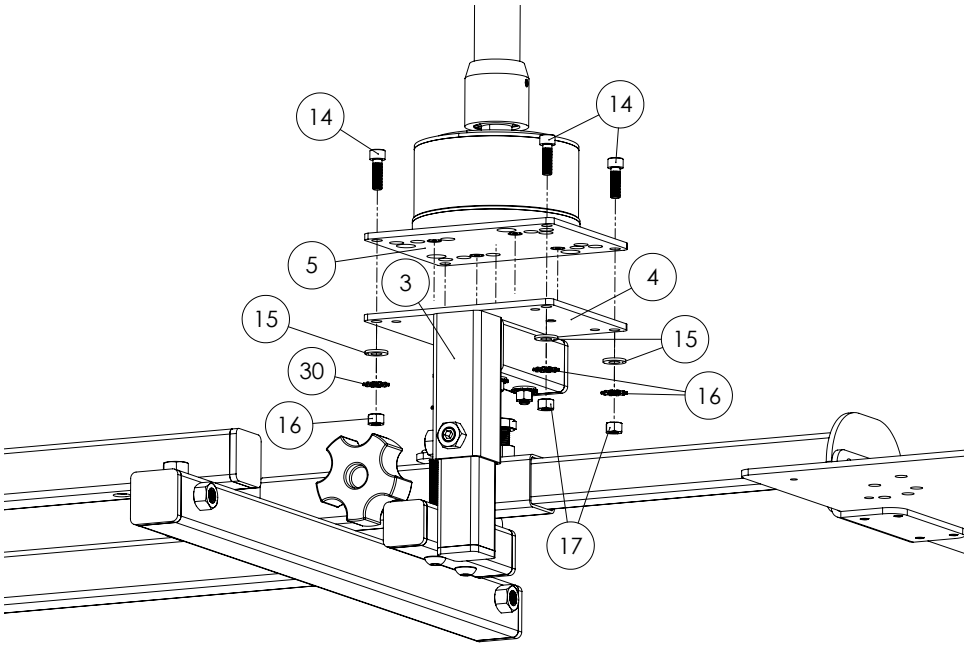

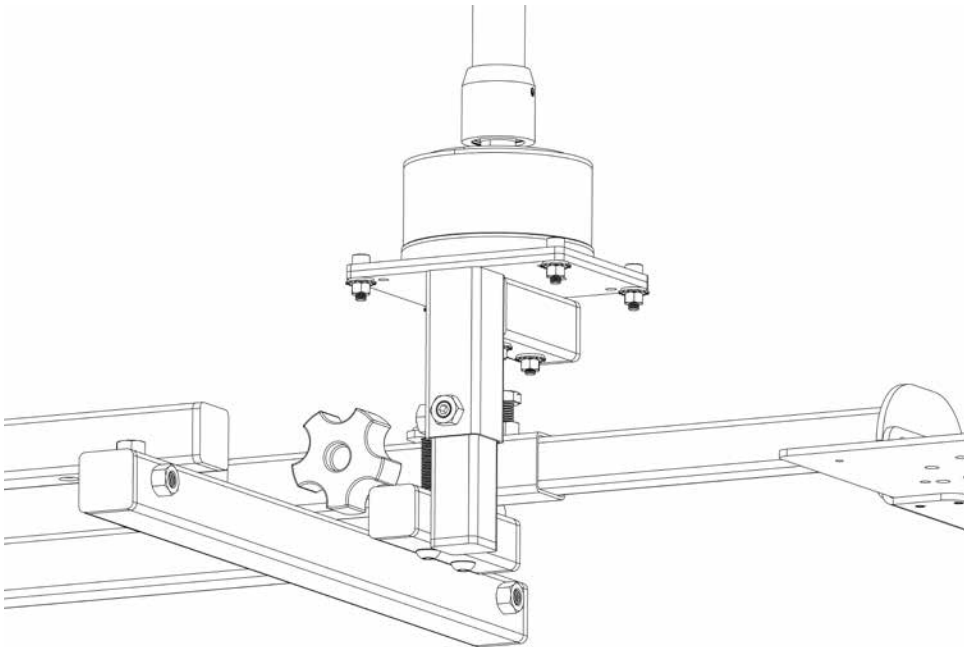

Option #3: Install bracket extension tube if necessary to achieve highest height adjustment. Normally used when stick is used without grip extension. Gently tighten down set screws pre-installed on two adjacent sides of tube extension until tube is secured and straight. Do not over tighten set screws.

Adjust overall bracket height by extending each section of the assembly within its limits

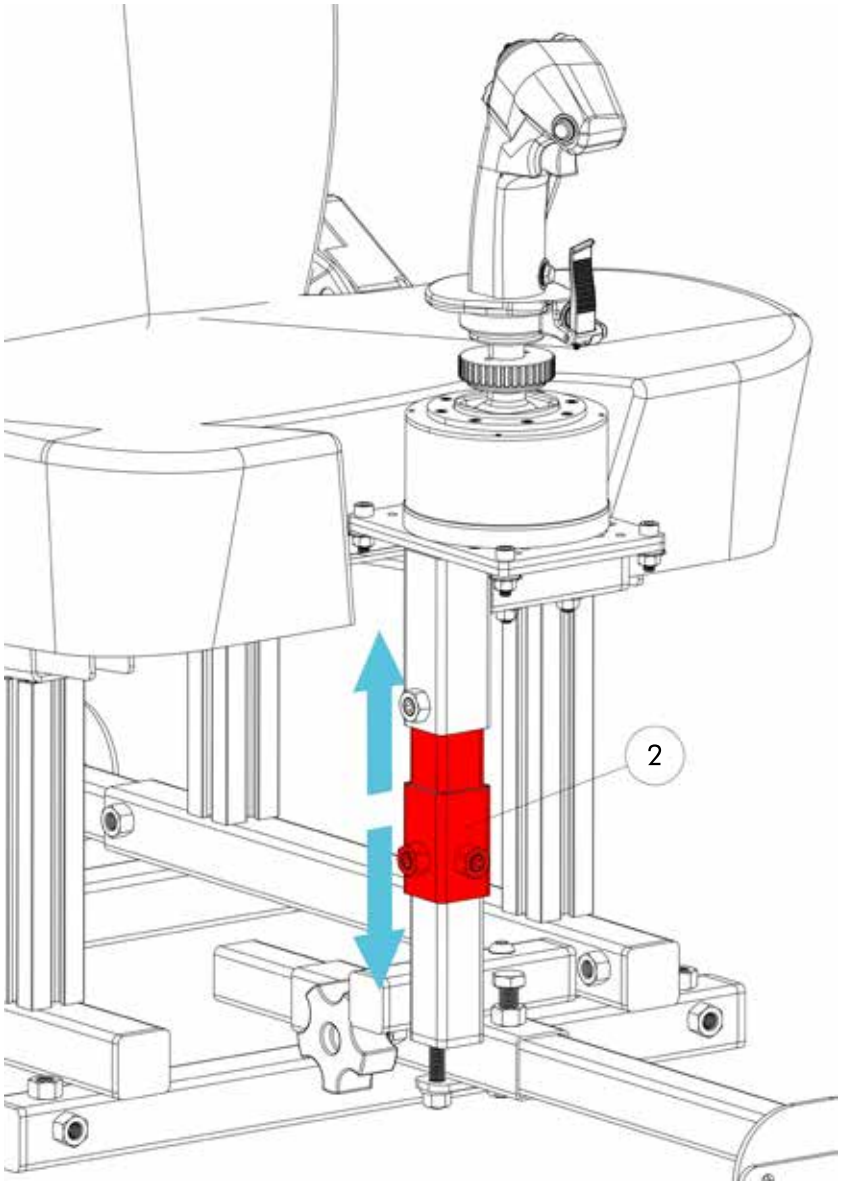

⚠ When center mounted stick is not being used, remove upper bracket along with the stick attached to it and leave lower bracket clamped on seat frame. For frequent controls hot swap, replace set screws with small quick release knobs. Look up our catalog for an optional kit including set of plates and upper L bracket dedicated to 2nd stick. Sticks can be hot swapped as illustrated with minimum downtime.



Specifications:

Recliner: max: 170 degrees
Construction: tubular steel frame with elastic strap supports
Seat Materials: high-density cold cure foam filling; Fabric, Steel chassis

Instructions during use and care:

Move simulator around with caution to avoid collision.
Keep out of direct sunlight and outdoor use.
Watch fingers when adjusting recliner.
Placing heavy or sharp objects on the seat may damage the surface material.
Do not use abrasive or chemically aggressive materials on the seat.
Use dry cloth or soft brush to clean the chair.

Dimensions:



Warranty Information

Return Policy

Terms And Conditions

http://homeracer.com/ow-termsandconditions.html















Assembly And Installation Manual For Retrofit Kit Force Feedback Stick Bases: Moza AB9, VPforce Rhino



Required accessory for center mount, not included in the kit, Grip Extension:

With force feedback center mounted stick bases such as Moza AB9 and Rhino, retrofit bracket kit has fixed height. Stick base size allows tight fit between lowest point of SimFab frame and bottom of seat base. Therefore, grip extension is the only way to adjust grip height. Adjusting the grip height is essential for optimal ergonomics and comfort of use. With the fixed base height, we recommend grip extension between 130mm and 180mm.
We recommend our grip extension: configuration #7 compatible with Moza, Rhino bases, Virpil, Thrustmaster, WinWing stick grips. SimFab grip extension allows continuous adjustment for precise height setting in range between 70mm and 195mm. Learn more about SimFab grip extension kit, configuration #7 here: https://simfab.com/product/simfab-flight-sim-configuration-7-stick-grip-extension-kit

Bill Of Parts

Required tools, not included in the kit.

Tools are included with all SimFab base models cockpits.
1. 17mm flat wrench
2. 13mm flat wrench
3. 10mm flat wrench
4. 5mm hex key
5. 4mm hex key

Hardware for both Moza AB9 and Vpforce Rhino:
1. Adapter base plate (2)

Clamping hardware
2. M8x90mm countersink bolt (2)
3. M8 wide washer (2)
4. M8 tooth washer (2)
5. M8 nut (2)
6. Clamping tab
7. Spacer tube

Upper to lower plates hardware:
8. M6x25mm socket bolt (4)
9. M6 washer (8)
10. M6 tooth washer (4)
11. M6 nut (4)

Frame knobs replacement hardware:
12. M10x20mm hex head bolt. Substitute with top knob
13. M10x12 set screw. Substitute with side knob

Moza AB9 hardware:
14. M6x12mm countersink bolt (4)

Side mount hardware:
15. M6x50mm countersink bolt (3)
16. M6 washer (3)
17. M6 tooth washer (3)
18. M6 nut (3)

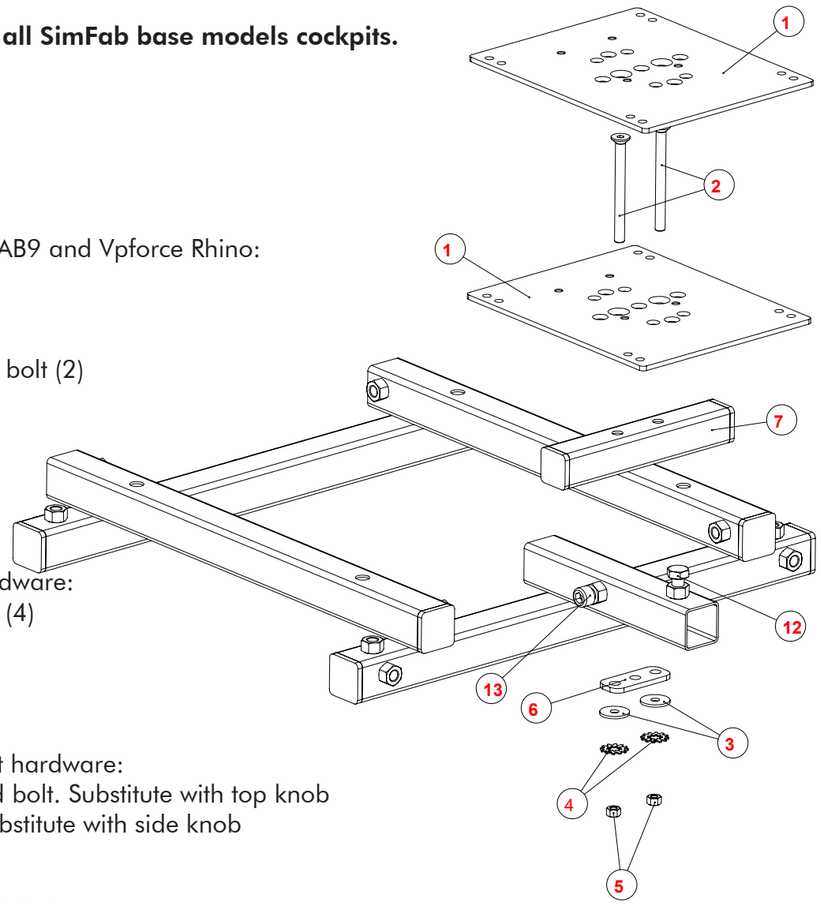

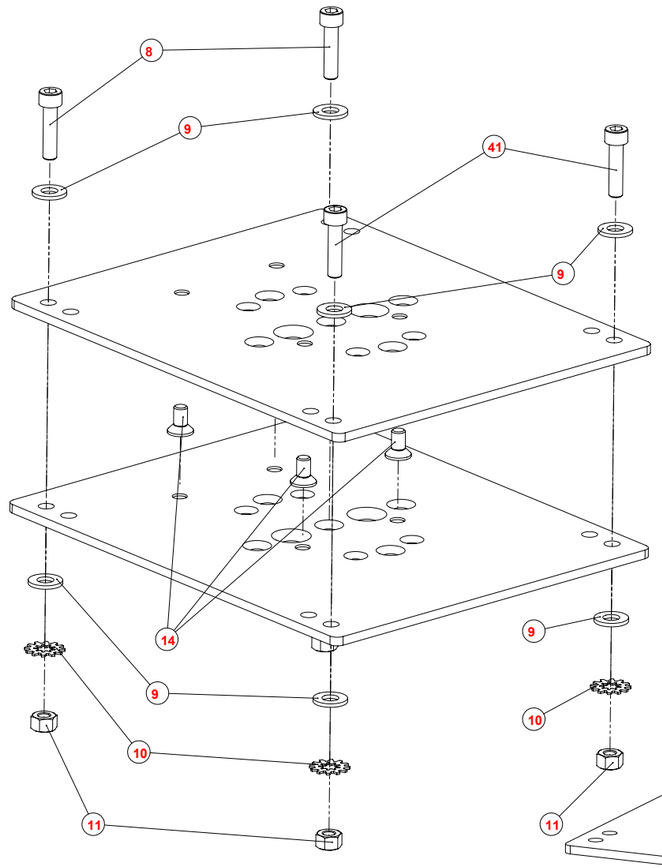

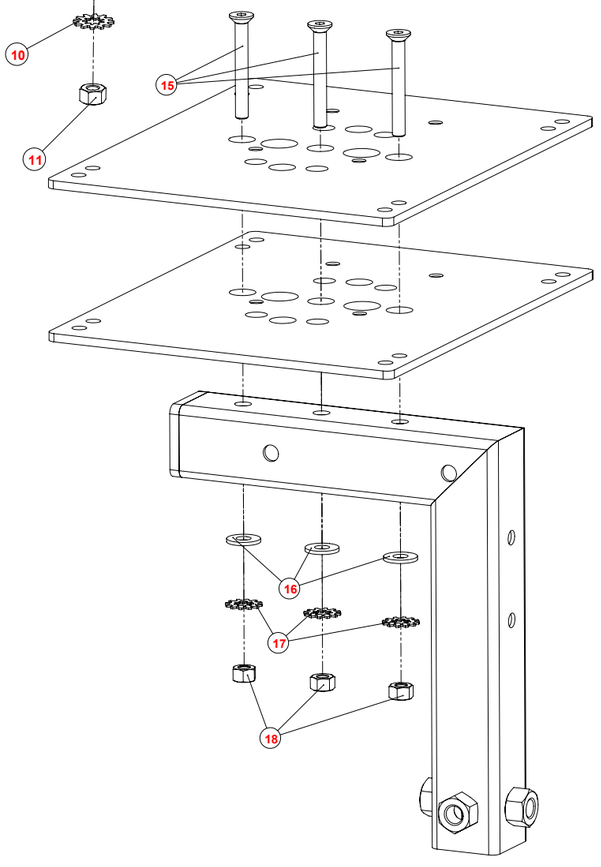



Moza AB9 Assembly And Center Mount Installation

- Keep plates in pair as they are packed. Turning plates around may cause mismatch of holes. To ensure correct direction of each plate, all holes on top and bottom plates must match.
- Remove default handle knobs on seat center frame and replace them with included hex head bolt (top) and set screw (side).
- Place tube spacer over frame center tube and install either one of the plates on top with clamping holes and clamping hardware.
- Ensure plate is installed correctly and matches holes to correct orientation of Moza stick base. Tighten nuts by hand and adjust fore/aft of plate on center tube. Tighten bolts and nuts equally until plate is secured. **Do not** over tighten hardware to avoid bending clamping tab, bending plate or damaging hardware.
- Install top plate to bottom of Moza stick base. Install all four countersink bolts by couple turns only and then use 4mm Hex key to tighten them all the way in.
- Sandwich top to bottom plates and secure them together through end perimeter of plates 4 holes, at each corner, with included hardware.

VPforce Rhino Assembly And Center Mount Installation

- Keep plates in pair as they are packed. Turning plates around may cause mismatch of holes. To ensure correct direction of each plate, all holes on top and bottom plates must match.
- Remove default handle knobs on seat center frame and replace them with included hex head bolt (top) and set screw (side).
- Place tube spacer over frame center tube and install both plates on top with clamping tab and clamping hardware.
- Tighten nuts by hand and adjust fore/aft of plate on center tube. Tighten bolts and nuts equally until plate is secured. **Do not** over tighten hardware to avoid bending clamping tab, bending plate or damaging hardware.
- Install Rhino base on top of plates and secure the base through matching plates and stick base holes, with included hardware.

Optional Side Mount Installation

Remove grip extension and connect grip directly to grip base.
Install bottom plate (for Moza) or both plate (for Rhino) to universal upper side bracket via 3 countersink bolts, washers, tooth washers and nuts.
Set lower L bracket with its shorter arm pointing up and longer arm sliding into the seat frame.
Slide upper L bracket to lower L bracket all the way down until it bottoms out. If necessary adjust height.

For SimFab setups with complex side mount such as configurations #10, #10A, #13 the side bracket is rather not suitable for FFB stick bases as lowest setting is still too high. Reach out to us for solution and modified parts.

Flight Simulator Add-on Kit

Configuration #11

Helicopter Collective Universal Mount Bracket Assembly

And Optional Accessories



Assembly instruction manuals available at:

http://bit.ly/ow-manuals

V2.4 060726

by SimFab.com

WARNINGS:

Proceed with caution and extra attention when warning signs are present during installation instructions manual.

WARNING

Choking hazard, small parts. Not for children under 5 years old.



WARNING

Keep hands and fingers clear of pinching points, and hinging metal parts.



If your item is damaged, defective or missing parts, please contact us first directly at Email: info@SimFab.com or
Toll Free: 1-888-299-2746

As the manufacturer, our knowledge of your new product ensures that we will be able to assist you promptly and accurately.

For invoices and other price information, please refer to your market place account for more details. Alternatively, you can always email us at info@SimFab.com

Table of Contents

Parts list.....6

Installation.....8

WinWing collective installation.....11
Collective adjustment.....13

Collective with short grip (WinWing).....14
Extra long grip (Apache).....14
VirPil collective installation, Apache grip, counterweight spring kit. 15

Adjustment.....18

Cable management and breaking apart cockpit for storage or moving it away.....21

Installation and use of flight sim add-ons to DD frame (chassis)....23

Specifications, Warranty, Terms and Conditions.....27

Parts list

1. Pivot bracket assembly
2. Collective arm bar
3. 4way coupler
4. Short connecting bar
5. Collective universal plate
6. Hardware

A. Cable management tie wraps (6)

B. M10x12mm set screws (6)

C. Plate mounting hardware:

M6x40mm bolts (2), wide washers (2), lock washers (2), nuts (2)

D. WinWing collective mounting hardware:

M6x15mm bolts (4), washers (4), lock washers (4), nuts (4)

E. VirPil collective base M8 retaining tooth washer.

VirPil collective counterweight spring kit bolt: M5x15mm and M5 tooth washer.

7. 8mm flat open wrench

Use tools included in base package SimFab cockpit, not included in this kit

1. 17mm open wrench
2. 10mm open wrench
3. 8mm Allen key
3. 5mm Allen key
5. 4mm Allen key

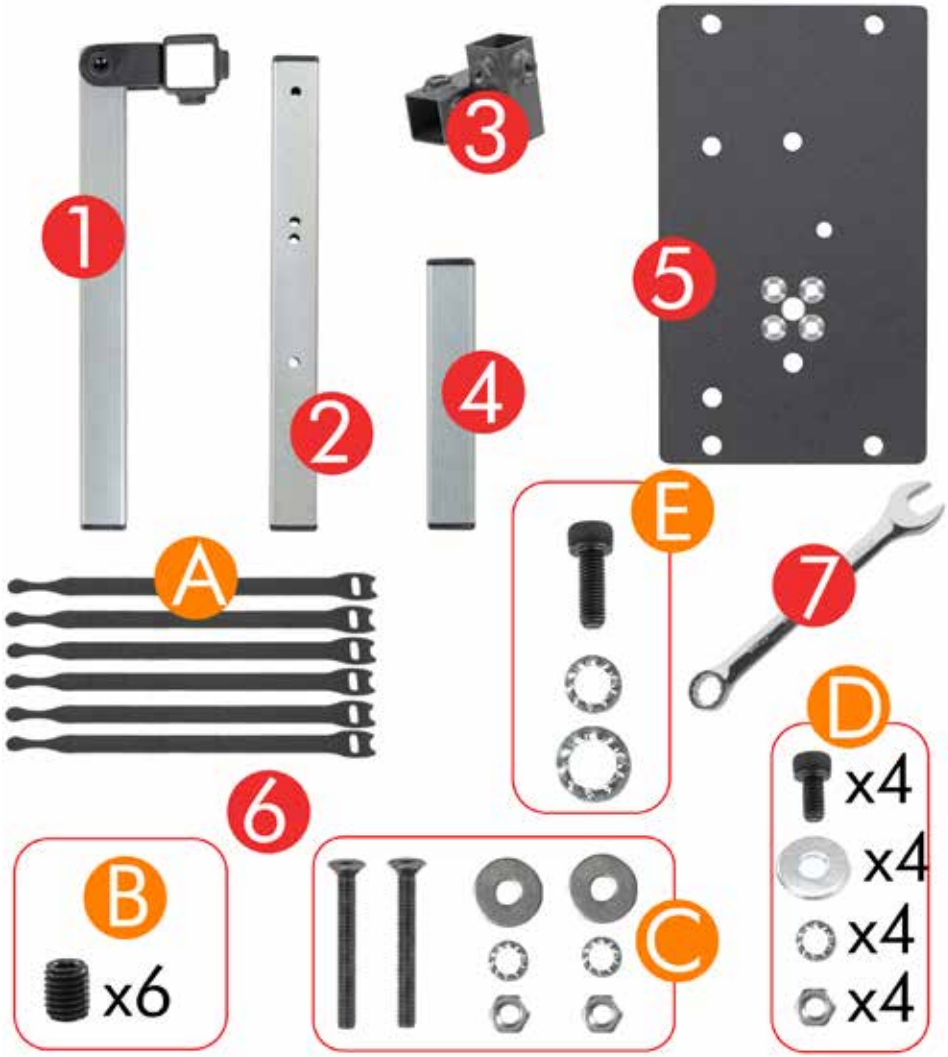

Installation

Bracket to seat frame installation.

Stand alone bracket (without "advanced modular side mount kit"). For installation with AMSM kit, skip to page 28.

1. Pry out frame side end cap at rear left corner of frame and pre-install pair of M10x20mm bolts.



2. Slide in short connecting bar to frame approximately 2 inches and tighten down both bolts. ⚠ Ensure there is enough tube inside frame to secure bolt to it.



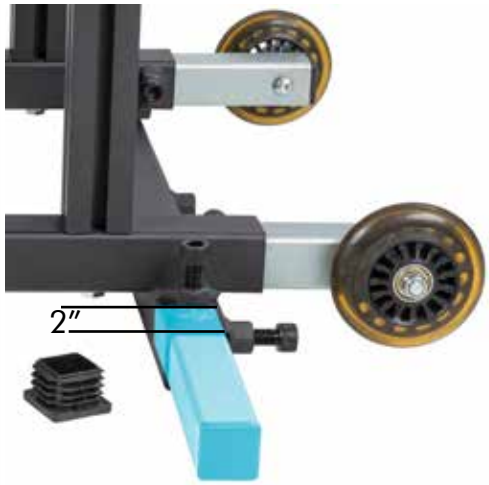

3. Slide in pivoting adapter bracket to short connecting bar at the end and tighten down pivoting bracket by pair of M10x12mm set screws.



4. Slide down 4way coupler approximately half way and secure it to pivoting bar by pair of M10x12mm set screws.

⚠ Ensure 2way coupler is installed in the same direction as shown.



⚠ When collective control is used on stand alone bracket as illustrated above, it is recommended removing the fighter jet throttle bracket or using longer arm of lower L bracket mounted to seat frame for wider range of adjustment sideways, to make room for collective between seat and throttle.



Bracket to seat frame installation with "advanced modular side mount kit".

5. Slide out AMSM assembly out of seat frame and slide in collective pivoting bracket assembly to rear T-extension approximately two inches in. Secure bracket by pair of M10x12mm set screws.



6. Slide down 4way coupler approximately half way and secure it to pivoting bar by pair of M10x12mm set screws.

⚠ Ensure 2way coupler is installed in the same direction as shown.



7. Next steps apply for both stand alone collective installation or collective with AMSM kit.

WinWing collective installation

⚠ For VirPil collective skip to page 33.

Install adapter plate to collective arm bar at third and fourth holes left to right) by using pair of M6x40mm bolts, washers and lock nuts.

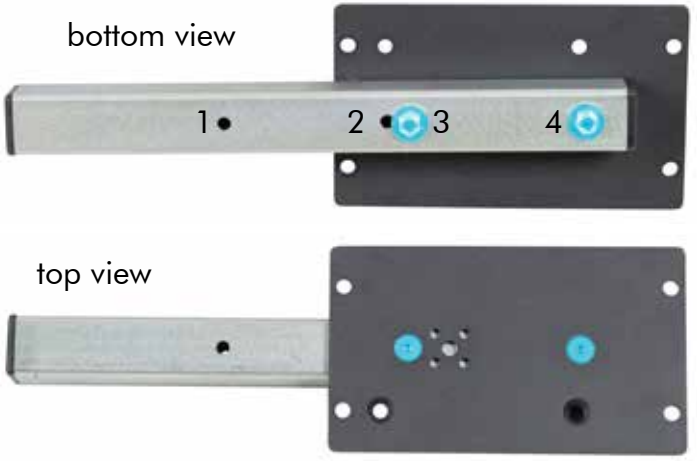

8. Install WinWing collective base to adapter plate by set of bolts/ washers, lock washers and nuts.



9. Slide collective arm bar to 4way coupler and secure it by pair of M10x12mm set screws.



10. Mount AMSM assembly back to seat frame.

Adjust Throttle distance to collective by sliding Lower L brackets in/out.

Adjust collective distance to seat by sliding T-extension in/out from seat frame. Ensure T-extensions have enough tube inside the frame to lock quick release knobs.

Adjust collective between throttle and seat by sliding it in/out on rear T-extension.

⚠ Ensure parallel relation between side rail and seat frame.



11. Collective grip adjustment.

A) Arm reach. Loosen pair of set screws on 4way coupler to arm bar and adjust fore/aft. ⚠ Refer to page 32 for grip base install behind pivoting tube. Applicable for longer grips such as VirPil Apache grip.



B) Collective base height. Loosen pair of set screws on 4way coupler to pivoting bracket bar and adjust up/down.



C) Pitch control angle range adjustment. Loosen pivoting bolt/nut and tilt bracket forward/backward.



12A. Use of collective with short grip.

Relocate collective bracket assembly to front tube of seat frame.

Reverse arm bar installation to collective base backwards.

Reverse pivoting bracket installation in front of short tube or T-extension bracket.

⚠ Same collective adjustments apply.



12B. Use of collective with extra long grip (Apache style).

Mount collective behind pivoting tube as illustrated. Mount arm bar in the mirror like reference to front of pivoting tube. Removal of plate and control is required to access bolts holding the arm bar.



13. VirPil collective installation with optional counterweight balance spring kit.

Install arm bar to plate by using pair of M6x50mm countersink bolts, washers, tooth washers and nuts. Use 5mm hex key and 10mm flat wrench.

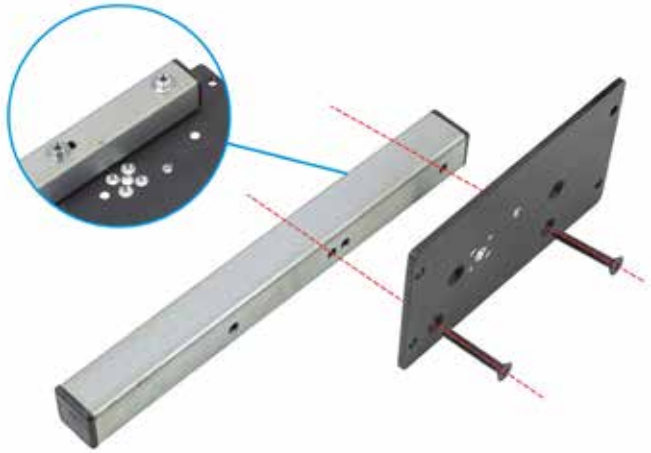

Remove Virpil factory bracket held by M8 bolt (5mm hex key) and 4 Phillips head screws.



Remove pair of bolts by using 2.5mm hex key.



Install counterweight spring kit. Ensure loading block is set to upper position (loose spring) as illustrated.

Skip to next steps if kit is not being used.



Place counterweight spacer in spring coil with black keyway matching the direction of spring end and install SimFab adapter plate by using Virpil longer bolts. Add SimFab included tooth washer between M8 bolt and washer.





Install arm bar to 4way coupler. Tighten pair of set screws on 4way coupler by 5mm hex key.

⚠ Arm reach fine adjustments will be made last.



Ensure grip is set at highest pitch point for the lightest spring tension. Position spring end retainer washer with spring wire into the washer channel. Guide washer to plate hole with fingers and insert SimFab included M5x15mm bolt through plate and washer holes. Install Virpil included nut and SimFab included tooth washer to bolt. Tighten bolt by using 4mm hex key and 8mm flat wrench, both included in SimFab kits.



Adjust VirPil collective base friction bolts under rubber caps (top and bottom of base). Adjust counterweight spring mechanism by 5mm hex key.



Adjust pivoting tube tilt for balanced pitch range. Test highest and lowest grip position to find optimal setting to personal preference.

⚠ Ensure tilt bolt is tight.





Adjust arm bar for optimal arm reach.

Adjust 4way coupler on pivoting tube for optimal height adjustment.



17. Use Velcro tie wraps to run all cables neatly around brackets and tubes. Ensure cables are not getting pinched or over stretched during re-adjustment.



18. To break down, store away or move your SimFab flight pit, disconnect each peripheral module/attached bracket at easiest breaking points as shown.



Installation and use of flight sim add-ons to DD frame (chassis).

⚠ To maintain squareness of DD frame, loosen one part and section at the time. Go back to DD kit installation process if frame or parts go out of alignment and no longer plumb and square.

Adding 4way couplers to side rail (left or right side)

Lift either side of seat and remove leveling feet. Use 2nd person to assist during process.

Loosen all three knobs on lower side of upright post and two knobs securing side rail to T-extension brackets.



Slide side rail forward and install 4way couplers.

⚠ Illustration below shows pair of couplers installed for helicopter sim collective bracket and fighter jet throttle. Install 4way couplers in the direction as shown. Use set screws placement as reference.

It is recommended to use helicopter collective bracket as stand alone unit, however fighter jet throttle can be installed at the same time.



Install back leveling feet, tighten all knobs and bolts. If necessary re-align all parts to keep framework square and plumb.

⚠ Coupler can be installed in front or behind T-extension brackets depending on personal preference of arm reach to controls.

Use either long or short arm of lower L bracket depending on height position preference.

Turn upper L bracket for stick and throttle pointing sideways (default), forward (+3" reach) or backwards (-3" reach).





Follow previous installation instructions for collective control with short tube mounted to lower side/rear 4way coupler.

⚠ **Install 4way coupler in reverse to bring collective closer to seat.**



Install throttle lower L bracket to front 4way coupler. Install upper L bracket with plate and throttle to lower L bracket. Make final adjustments. Ensure all set screws, bolts and knobs are tight.



Specifications:

Recliner: max: 170 degrees
Construction: tubular steel frame with elastic strap supports
Seat Materials: high-density cold cure foam filling; Fabric, Steel chassis

Instructions during use and care:

Move simulator around with caution to avoid collision.
Keep out of direct sunlight and outdoor use.
Watch fingers when adjusting recliner.
Placing heavy or sharp objects on the seat may damage the surface material.
Do not use abrasive or chemically aggressive materials on the seat.
Use dry cloth or soft brush to clean the chair.

Dimensions:



Warranty Information

Return Policy

Terms And Conditions

http://homeracer.com/ow-termsandconditions.html













