SimFab®

DD Modular Racing Sim Conversion Kit

Assembly Manual



Assembly instruction manuals available at:

https://simfab.com/webmanuals.html

V1.1 073025

by SimFab®

If your item is damaged, defective or missing parts, please contact us first directly at Email: info@SimFab.com or
Toll Free: 1-888-299-2746

As the manufacturer, our knowledge of your new product ensures that we will be able to assist you promptly and accurately.

For invoices and other price information, please refer to your market place account for more details. Alternatively, you can always email us at info@SimFab.com

WARNINGS:

Proceed with caution and extra attention when warning signs are present during installation instructions manual.





Table of Contents

Parts list for DD conversion kit (race pedal plate not included).....4
Parts list for DD+ conversion kit (angled race pedal plate included).6
Parts list for DD+ conversion kit (flat race pedal plate included).....8
DD conversion kit introduction.....10
Angled race pedal plate installation.....11
Race pedal plate mount patterns.....15
Flat race pedal plate installation.....16
Side frame assembly installation.....17
Race pedal plate to frame installation.....23
Cross bar and race wheel base plate installation.....24
Adjustments.....34
Optional gear shift / handbrake mount bracket.....36
Optional add-on conversion kits.....37
Specifications, warranty policy, terms and condition.....41

Parts List, Conversion kit DD
Pedal Plate Not Inculded

2 Side vertical column (1)

3 Short T extension (4)

4 Side support tube (2)

5 Pivot bracket (one is pre-installed to side vertical column) (2)

6 Cross bar (1)

7 Upright post (1)

8 Plate adapter bracket (1) (pre-assembled to base plate)

10 Race wheel base plate (1)

13 Leveling feet (pre-assembled) (4)

16 4-Way Coupling (1)

17 Large knob (2)

18 Small knob (5) Replace lower side large knobs of Gen3 post with small knobs for clearance.

19 Universal side lower L bracket (optional) (1)

20 Universal side upper L bracket (optional) (1)

21 Sequential shifter and handbrake base plate (optional) (1)

Hardware, tools, accessories:

M10, 12mm set screw (20) (pre-assembled)

Optionally replace all 10 seat frame socket bolts with the included extra set screws for a more uniform aesthetic.

Velcro ties for cable management (6)

Torpedo level

Controls mounting hardware

Bag D

M6 hardware set

M5 hardware set

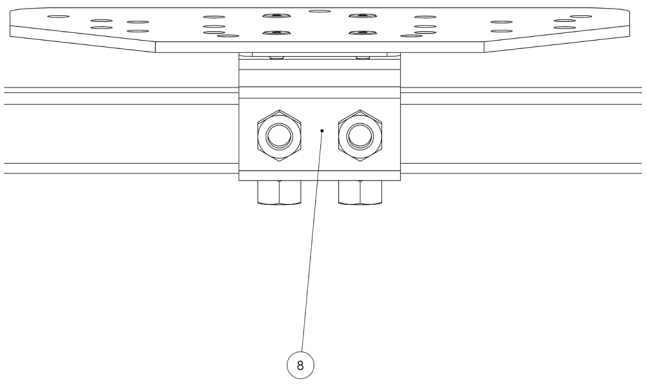

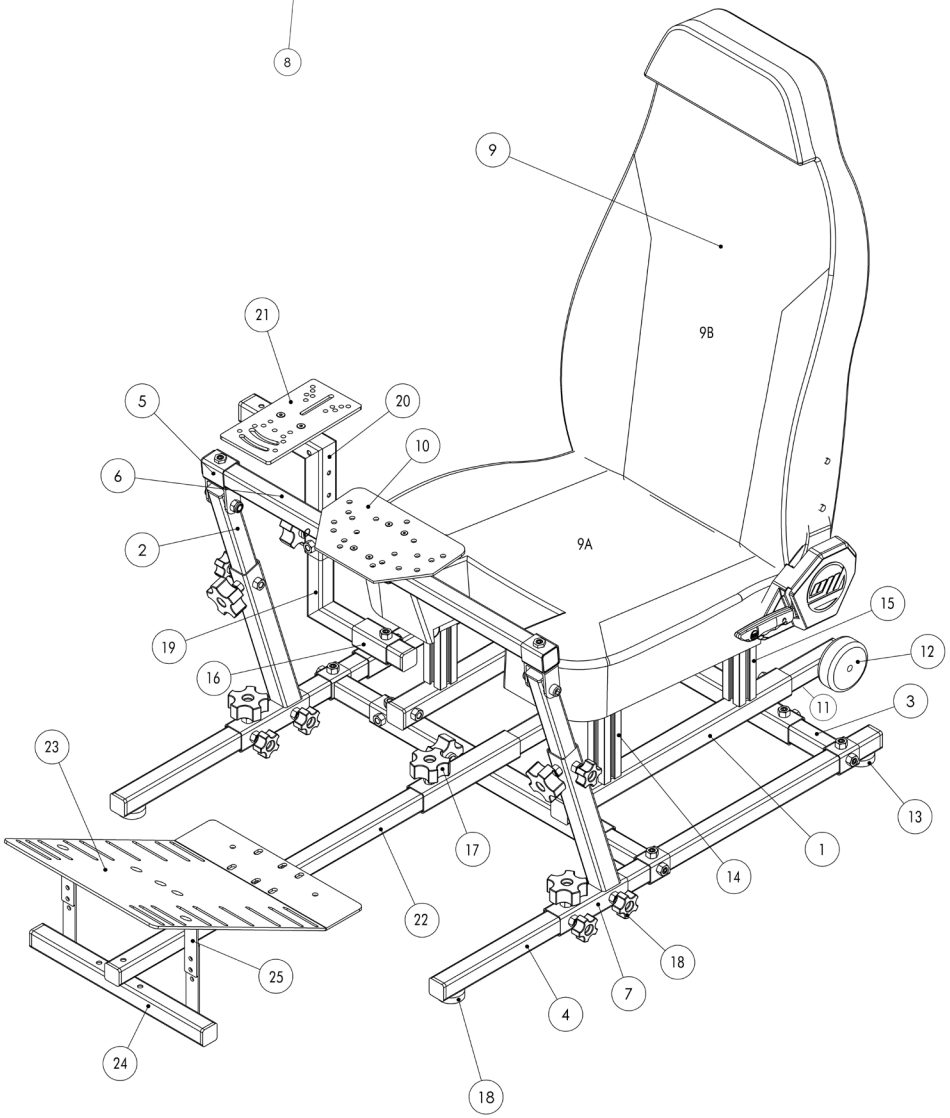

Parts List, Conversion kit DD+
Angled Pedal Plate Included

2 Side vertical column (2)
3 Short T extension (4)
4 Side support tube (2)
5 Pivot bracket (pre-installed to side vertical column) (2)
6 Cross bar (1)
7 Upright post (2)
8 Plate adapter bracket (1) (pre-assembled to base plate)
10 Race wheel base plate (1)
13 Leveling feet (4)
16 4-Way Coupling (2)
17 Large knob (4)
18 Small knob (6)
19 Universal side lower L bracket (optional) (1)
20 Universal side upper L bracket (optional) (1)
21 Sequential shifter and handbrake base plate (optional) (1)

Hardware, tools, accessories:

M10, 12mm set screw (20) (pre-assembled)
Optionally replace all 10 seat frame socket bolts with the included extra set screws for a more uniform aesthetic.
Velcro ties for cable management (6)
Torpedo level
Controls mounting hardware
Bag D
M6 hardware set
M5 hardware set

Angled pedal plate parts and hardware

22 Main support tube (1)
23 Angled race pedal plate (1)
24 Pedal plate lower support bracket (1)
25 Pedal plate upper support bracket (2)

Leveling feet (pre-assembled)
M6, 15mm socket head (4)
M6 fender washer (4)
M6 tooth washer (4)
M6 nut (4)
M8 20mm, countersink head bolt (2)
M8, 50mm, button head bolt (2)
M8, 75mm, button head bolt (1)
M8 fender washer (6)
M8 lock nut (5)
Plastic spacer wedge (1)

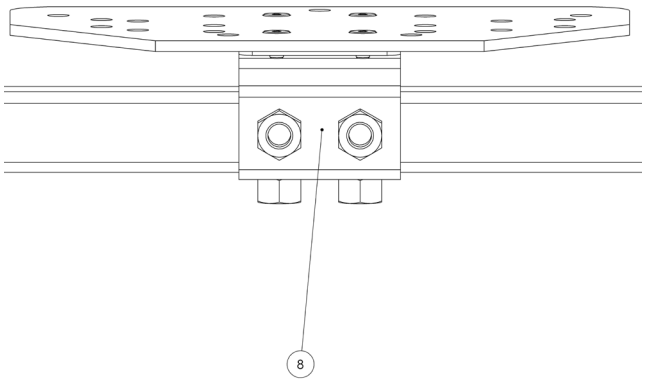

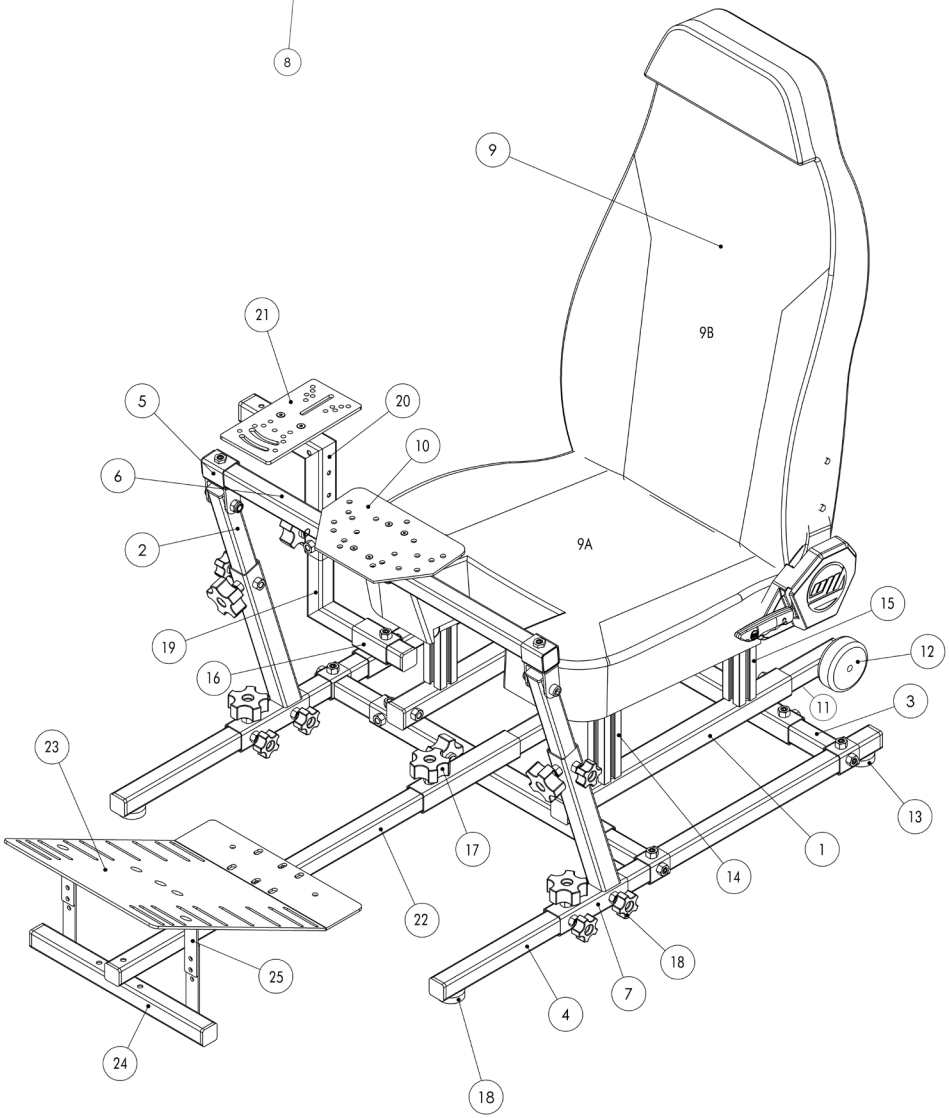

Parts List, Conversion kit DD+
Flat Pedal Plate Included

2 Side vertical column (2)
3 Short T extension (4)
4 Side support tube (2)
5 Pivot bracket (pre-installed to side vertical column) (2)
6 Cross bar (1)
7 Upright post (2)
8 Plate adapter bracket (1) (pre-assembled to base plate)
10 Race wheel base plate (1)
13 Leveling feet (4)
16 4-Way Coupling (2)
17 Large knob (4)
18 Small knob (6)
19 Universal side lower L bracket (optional) (1)
20 Universal side upper L bracket (optional) (1)
21 Sequential shifter and handbrake base plate (optional) (1)

Hardware, tools, accessories:

M10, 12mm set screw (20) (pre-assembled)
Optionally replace all 10 seat frame socket bolts with the included extra set screws for a more uniform aesthetic.
Velcro ties for cable management (6)
Torpedo level
Controls mounting hardware
Bag D
M6 hardware set
M5 hardware set

Flat pedal plate parts and hardware

22 Main support tube (1)
26 Flat race pedal plate (1)
27 Pedal plate support bracket (1)
Leveling feet (pre-assembled)
M8, 20mm, countersink head bolt (2)
M8, 50mm, countersink head bolt (2)
M8, fender washer (2)
M8, lock nut (2)

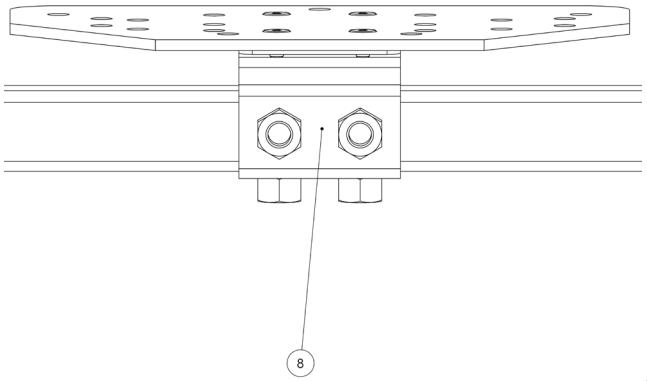

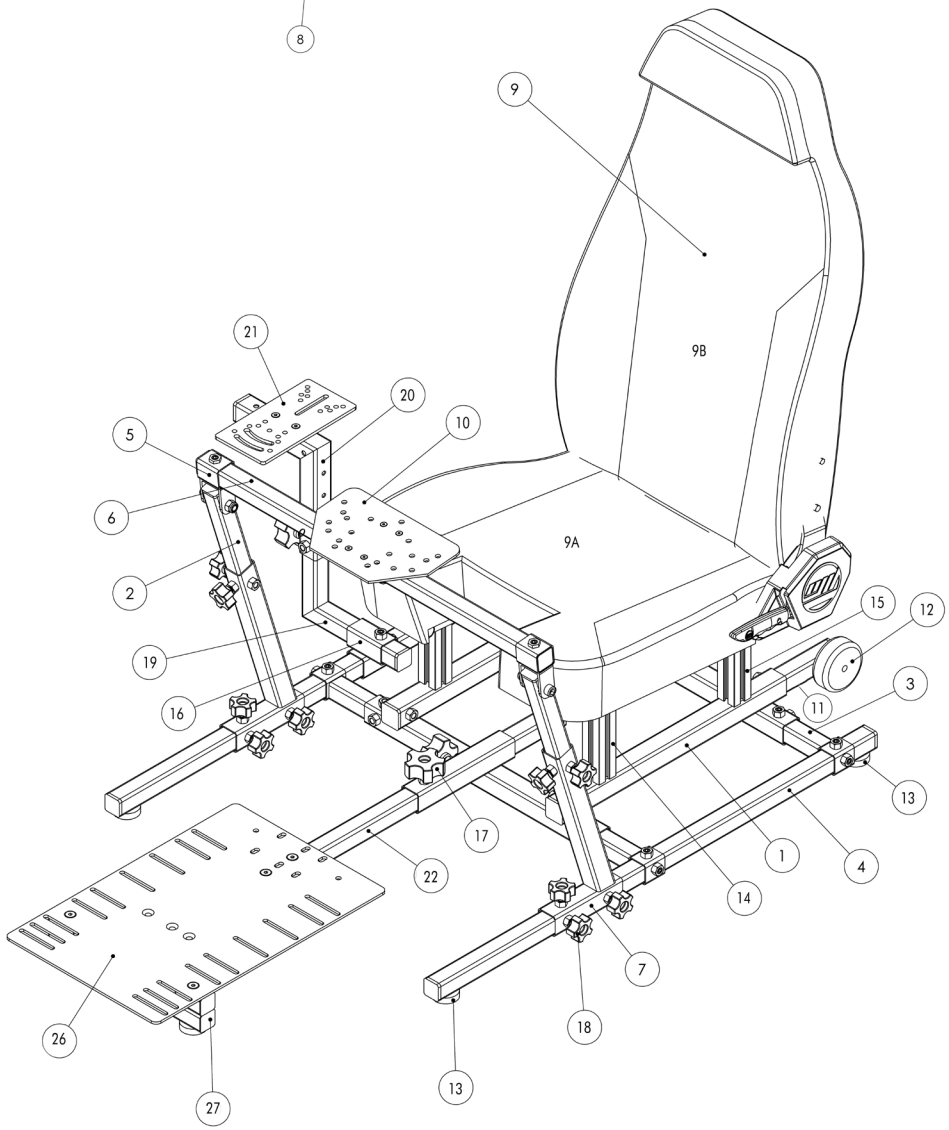

DD conversion kit introduction

DD conversion kit is extended kit for sim racing with racing wheel mounted on a cross bar. DD framework offers lateral rigidity necessary for heavier direct drive wheels with over 12NM of force feedback. Frame is also sufficient for any other race wheel where cross bar mount is user's preferred choice.

DD conversion kit assumes pre-existing base framework (cockpit), part of SimFab or OpenWheeler modular ecosystem.

DD conversion kit is offered in the following variations:

1 DD conversion kit, race pedal plate not included. DD kit is suitable for users with Gen3 cockpits (race wheel single post mount). DD conversion kit is designed to expand Gen3 base framework and utilize all parts from it.

2 DD conversion kit "plus" includes race pedal plate assembly. DD+ kit is suitable for users with flight sim base cockpit, looking to add sim racing setup.

Pedal plate is offered with **angled or flat plate**. Pedals such as Moza, Simagic and others with steeper default pedals angle are better suited with flat race pedal plate, while pedals such as Logitech and others with lower default pedals angle are better paired with angled race pedal plate.

Conversion kits do not include wrenches and tools, normally included in all SimFab and OpenWheeler base cockpits.

Angled race pedal plate installation.
Pedal Plate Assembly

- Use hardware from bag A, group 1 to mount upper support brackets to lower support bracket.
- Match pair of holes on upper brackets with center pair of holes on lower support bracket. Upper bracket goes in front of lower bracket. Ensure brackets are straight and square.

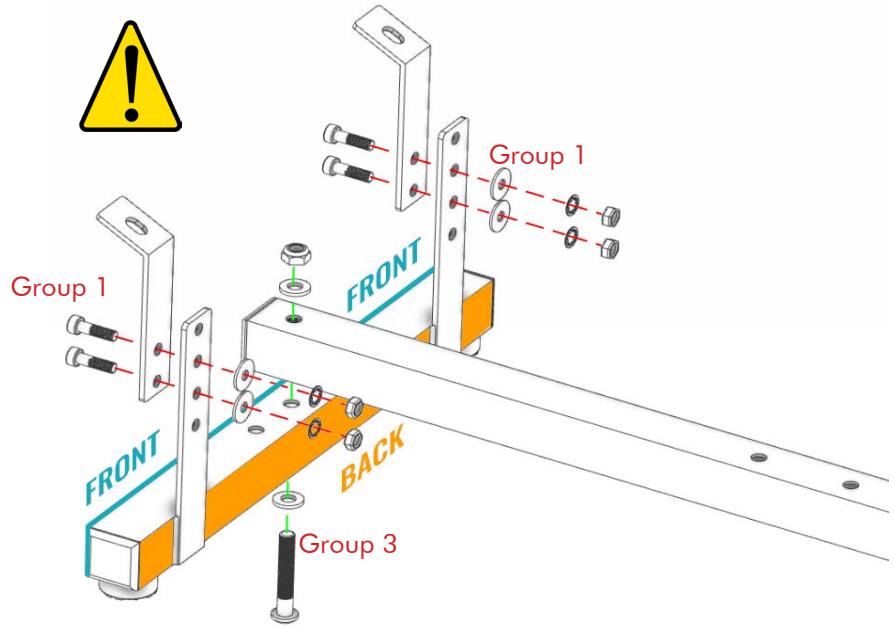

• Tighten down all four bolts with 10mm open wrench and small (5mm) Allen key.

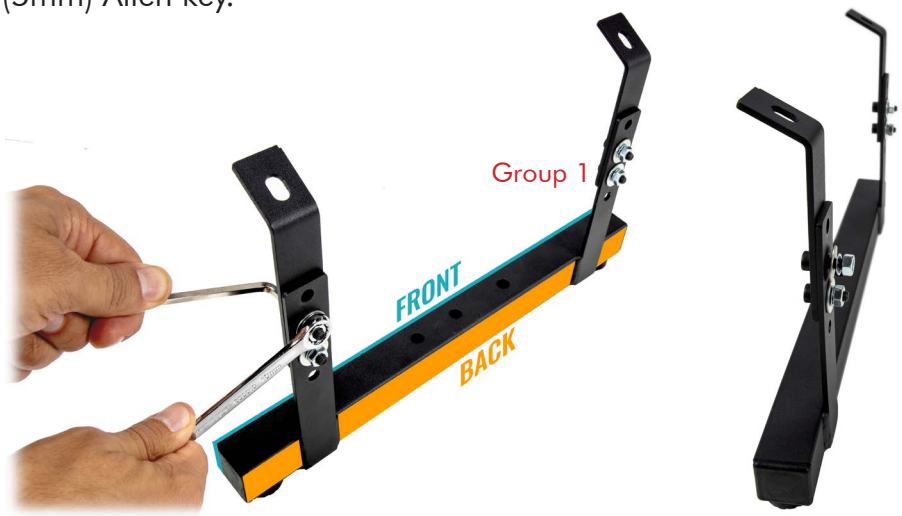

• Use hardware from Bag A, group 2 to mount upper support brackets to pedal plate. Leave bolts hand tight.

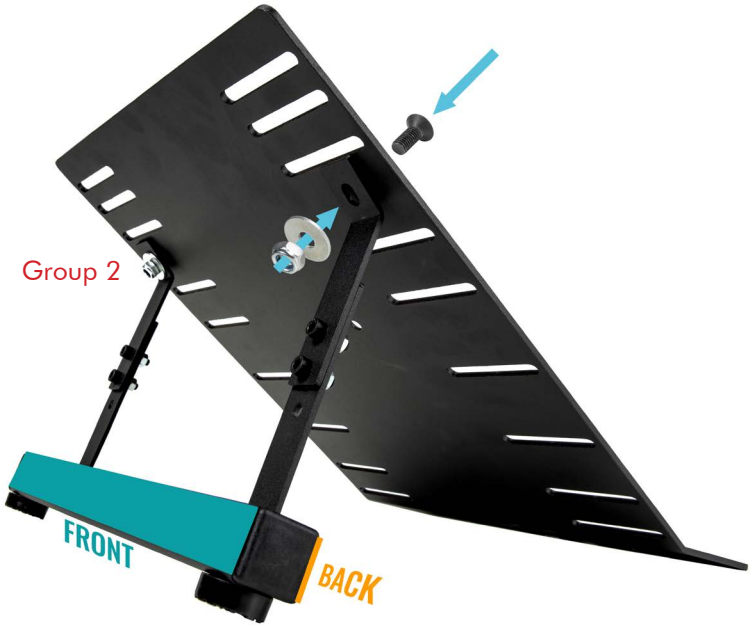

• Use hardware from Bag A, group 3 to mount main support tube to lower support bracket. Leave bolts hand tight.
• Use hardware from bag A, group 4 to mount main support tube to pedal plate. Leave bolts hand tight



• Tighten down all hardware in the following order: group2; group 3; group 4 by using 13mm open wrench and small (5mm) Allen key.

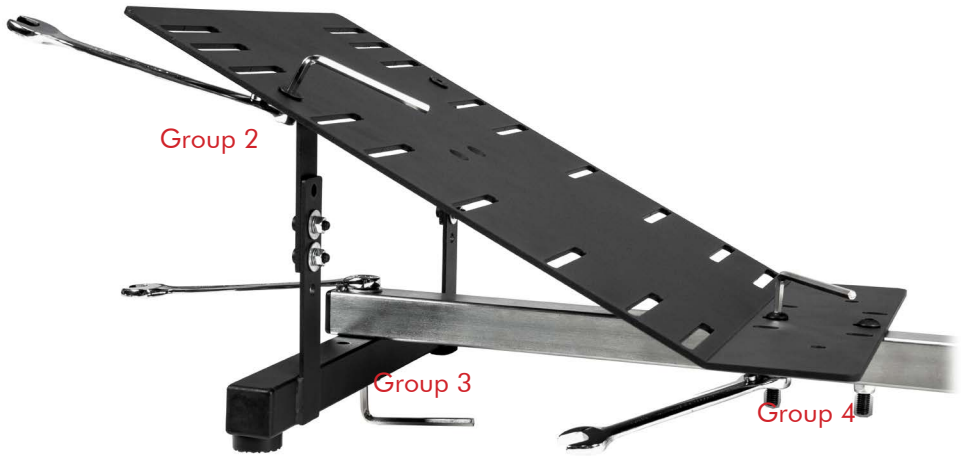

Pedal plate angle adjustment.

• Pedal plate angle adjustment. Pedal plate allows three angle positions: default , -5°, +5°.



•• Adjusting plate to -5°. Remove Hardware group 4; Loosen up hardware group 2; remove hardware group 1. Adjust upper support brackets to lowest pair of matching holes. Reinstall hardware group 1; Tighten down group 2; Install plastic spacer with matching angle direction. Re-install hardware group 4.

•• Adjusting plate to +5°. Follow same procedure as lowering angle. Mount plastic spacer opposite direction, according to matching pedal plate angle.

Race pedal plate mounting patterns

Logitech

Thrustmaster

Thrustmaster 2

Fanatec
CS/CSL/CSL Elite

Moza CRP

Simagic P1000

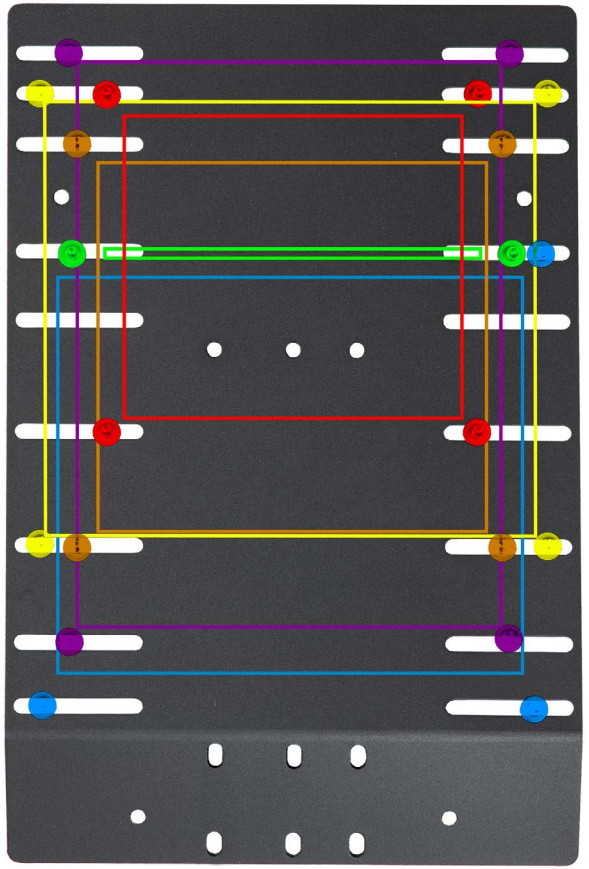

Use bolts, washers and small Allen key to hard mount pedals to pedal plate (bag C).

Pedal Plate mounting pattern.

Flat race pedal plate installation.

Place flat plate standoff bracket and main support tube under flat plate, and match pair of countersink holes in front ,and pair of round holes at seat side. Oblong holes on the plate are not used with this configuration.

Install pair of countersink bolts and pair of bolts main support tube to pedal plate.

Slide the main support tube back to seat frame and tighten pair of quick release knobs.

Adjust leveling feet to touch floor, however ensure they are not lifting plate up.

Remove plate and install back race pedals.

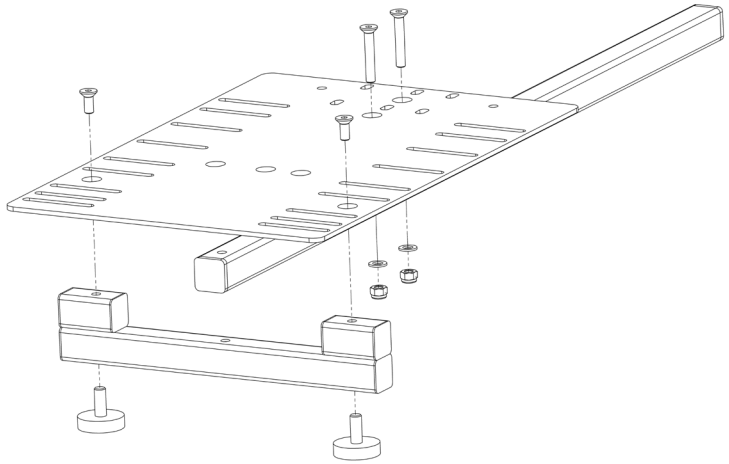

Slide in T-extensions into seat frame, approximately 3in as illustrated. Ensure both T-extensions are installed at equal distance from frame. Leave them loose until all rest parts are situated.

Repeat same step on opposite side of seat frame.

Lastly, verify plumbness, square and parallel relation of all parts prior tightening all hardware.

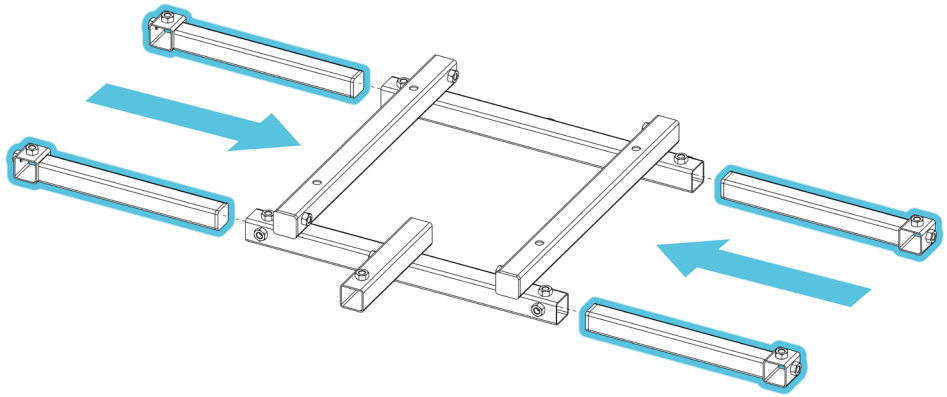

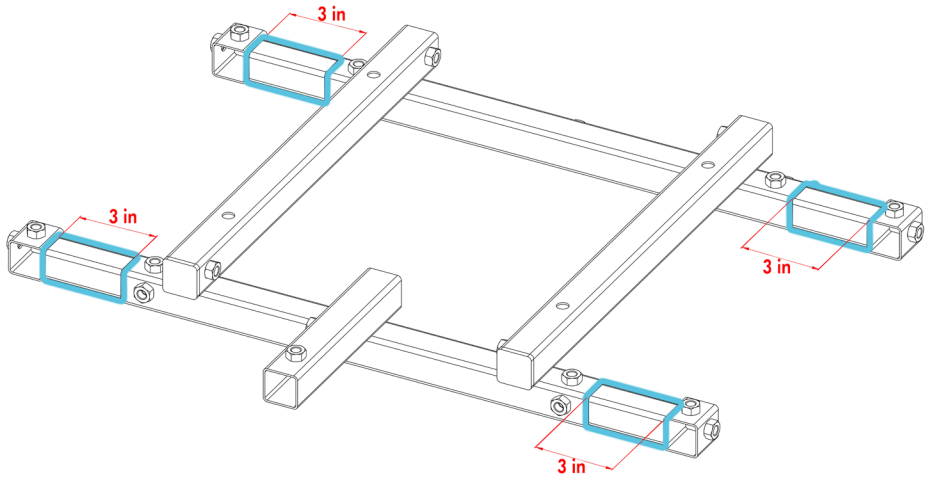

Slide side support tube through T-extension tubes.

* Remove leveling feet from side support tubes if they are pre-installed.

Repeat same step on opposite side of seat frame.

Leave side support tube approximatly 3in past rear T-extensions.

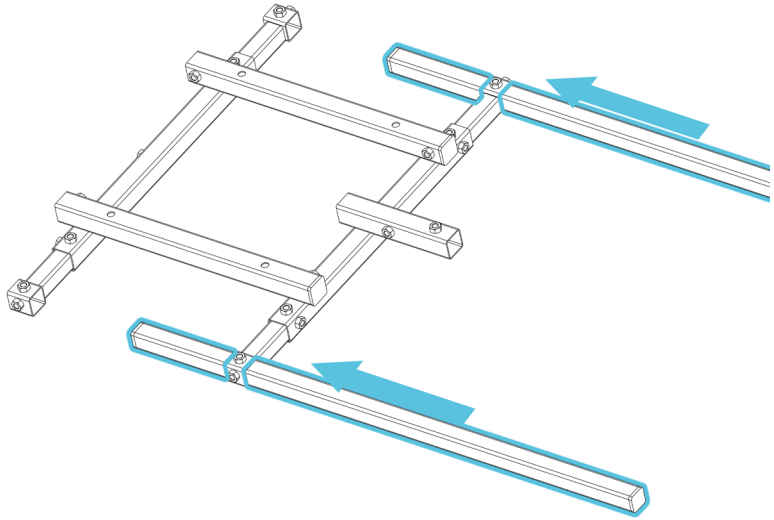

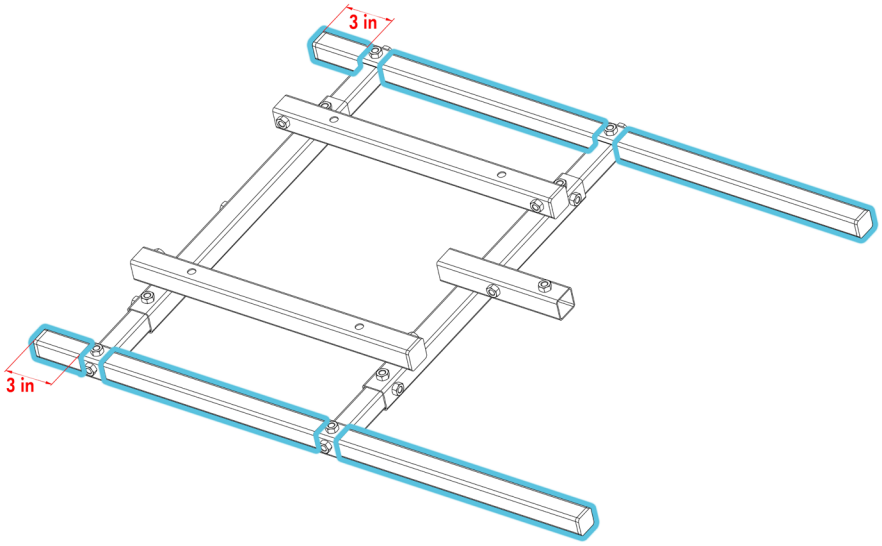

Optional, slide 4-way coupling for gear shift mount or side flight control to side support tube as illustrated

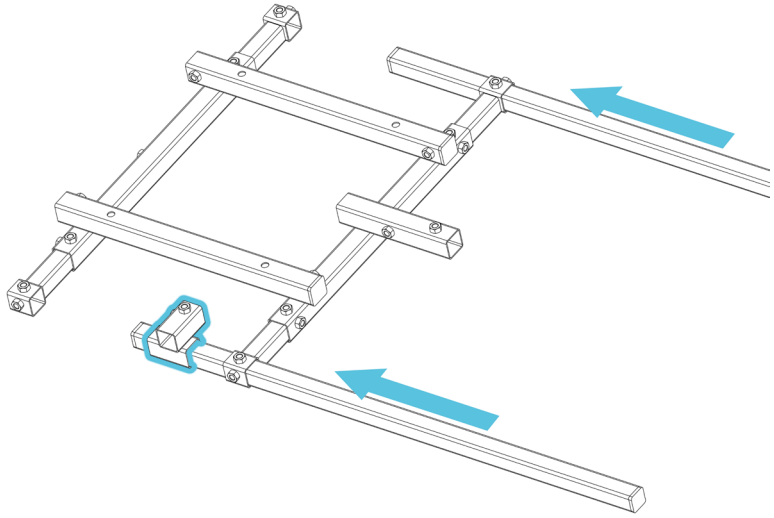

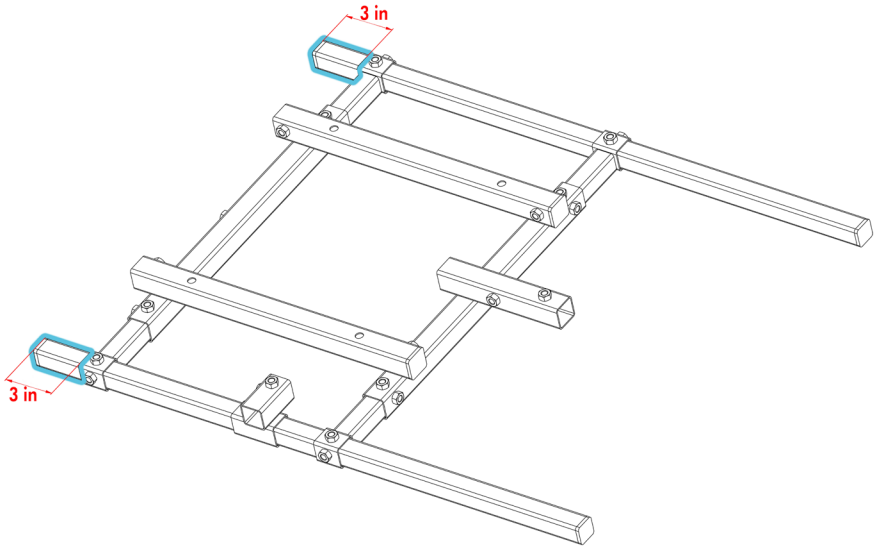

Slide upright post to side support tube.

Repeat same step on opposite side of seat frame with posts at approximately same distance from front T-extensions.

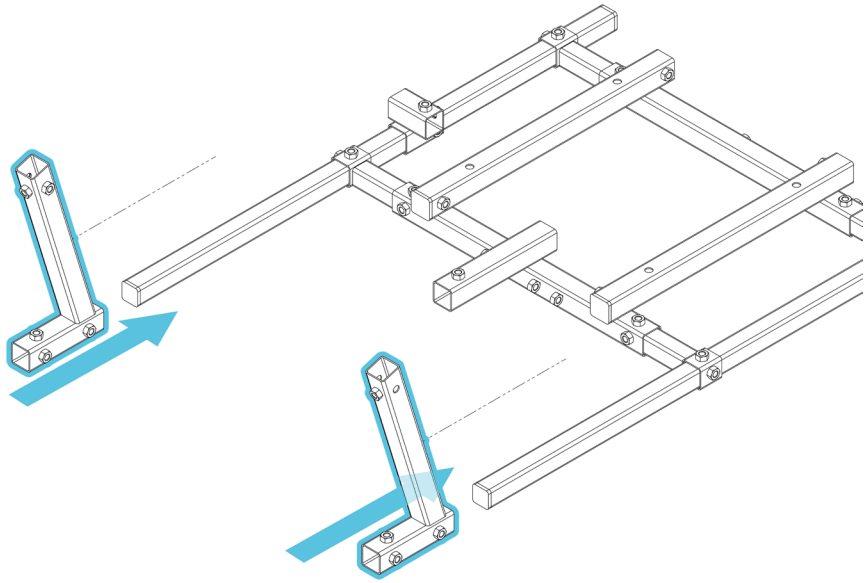

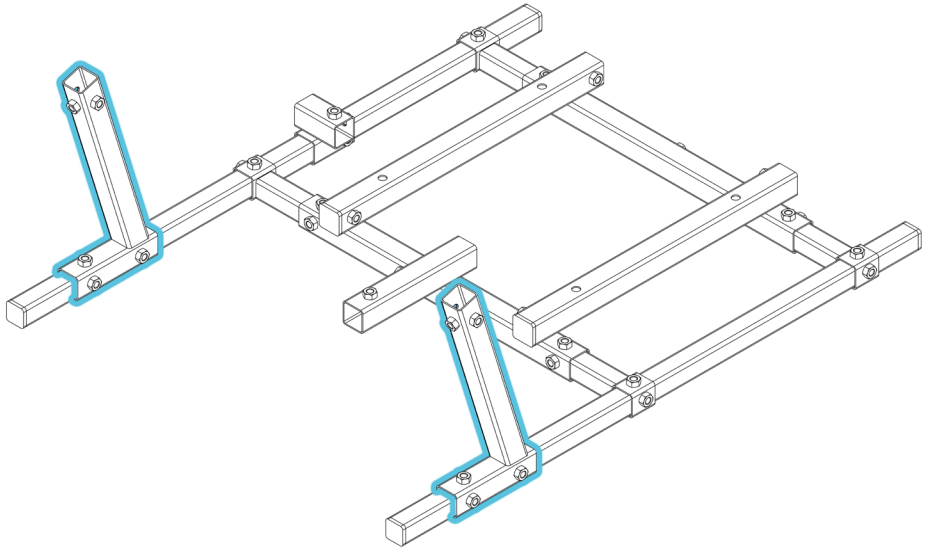

Lift slightly each side and install leveling feet all the way into each end of side support tube.

Repeat same step on opposite side of seat frame.

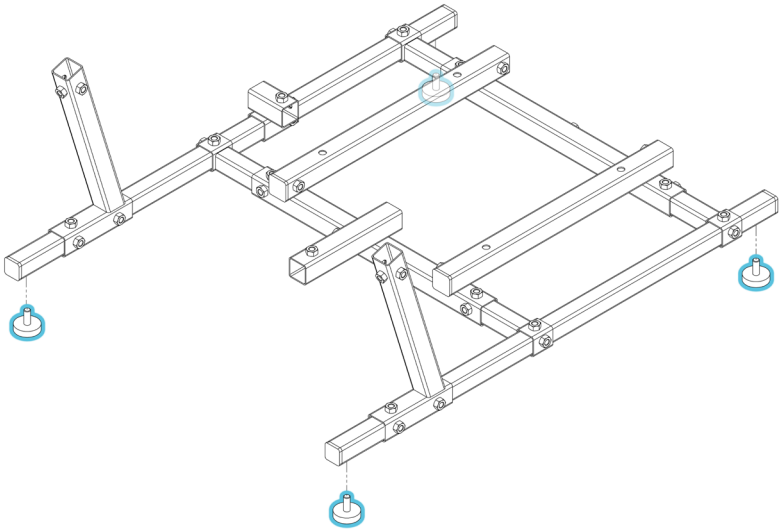

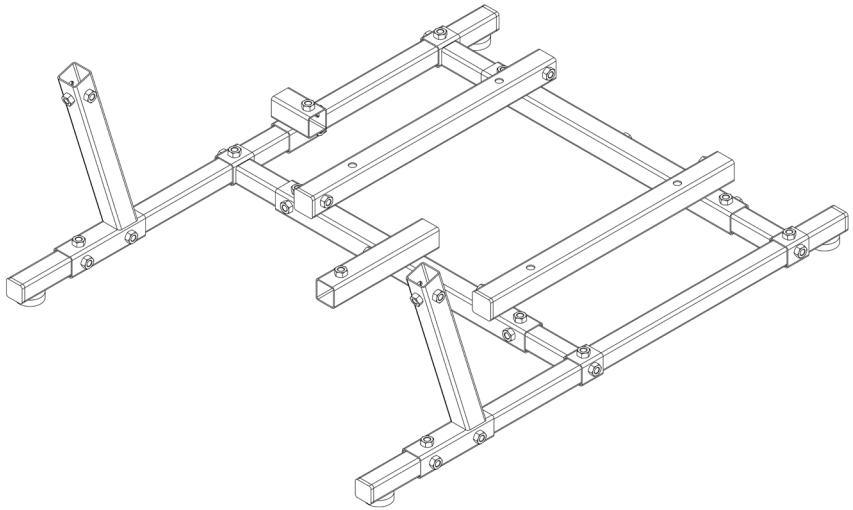

Adjust side rails all the way forward until rear leveling feet touch rear T-extensions.

Repeat step to both sides of seat frame.

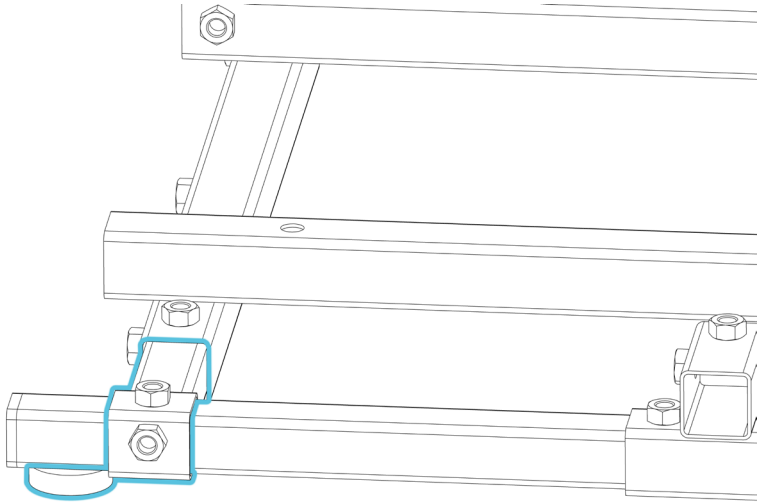

Install vertical column with pre-assembled tilt bracket to upright post.

Slide column all the way down until it bottoms out on the upright post. For DD conversion kit, install 2nd tilt bracket to wheel column from Gen3 kit. Ensure double tooth washers are installed on inside of tilt bracket tabs.

Repeat same step on opposite side of seat frame.

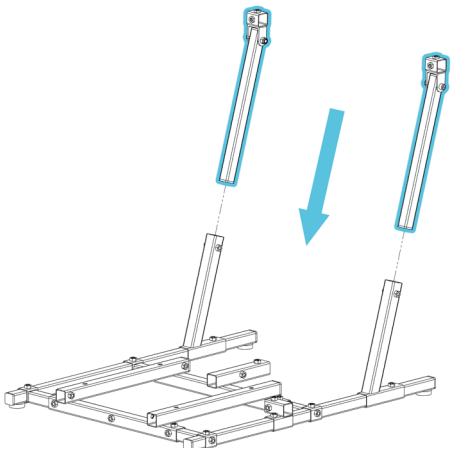

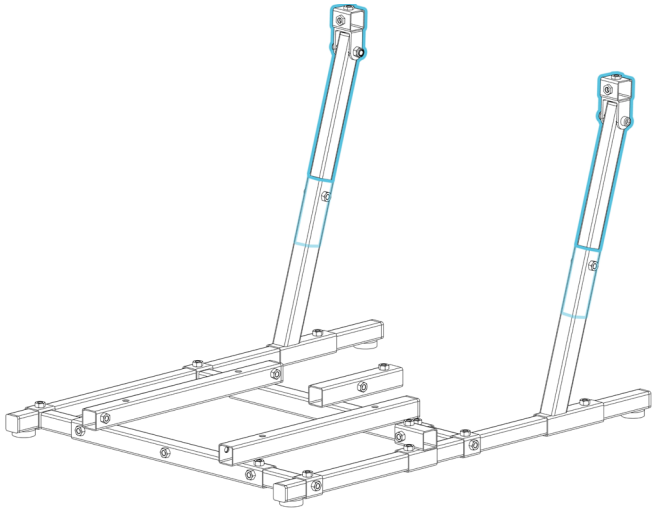

Slide pedal plate assembly to seat frame.

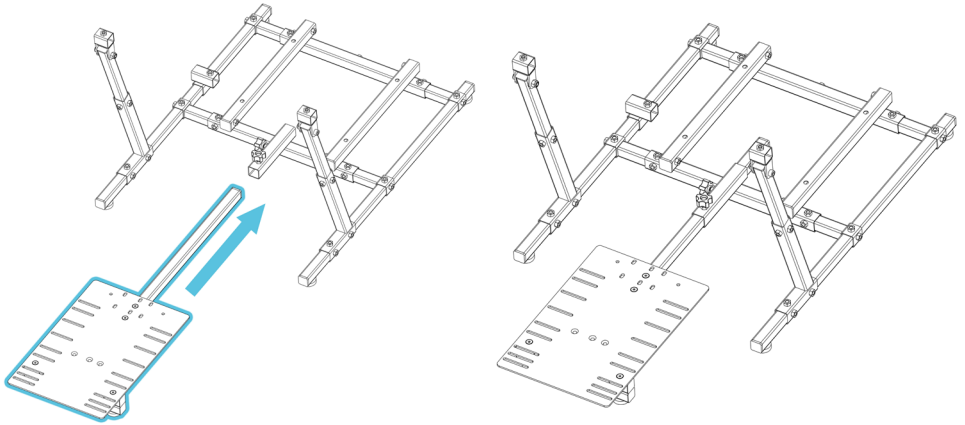

Adjust leveling feet of pedal plate bracket just until they touch floor. Do not over extend them to avoid lifting entire frame.

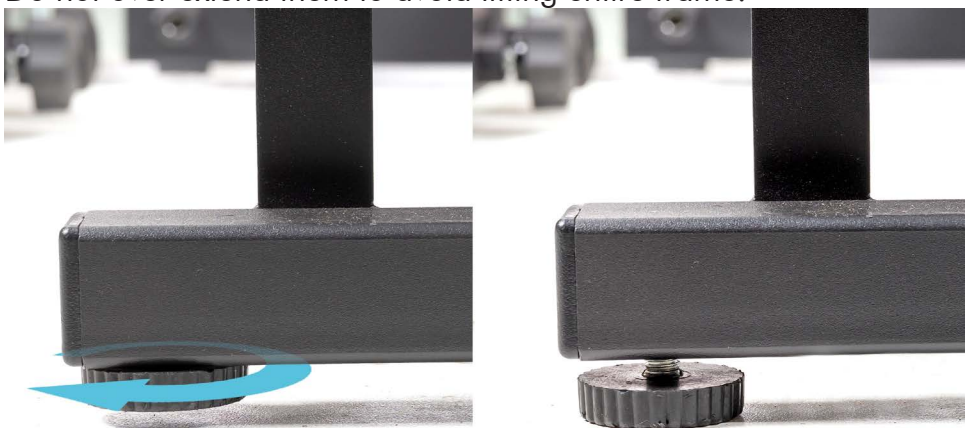

Install race wheel base plate to plate adapter bracket. It may come pre-installed.

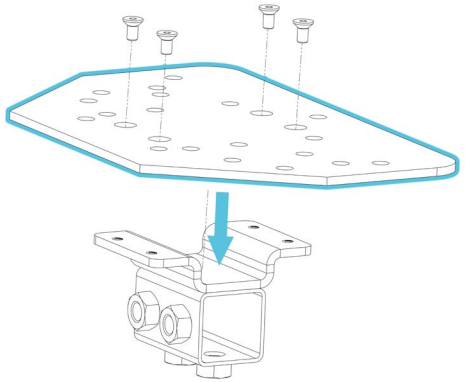

Slide wheel plate adapter bracket to cross bar

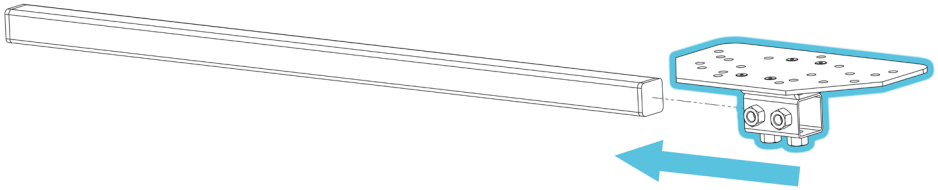

Tighten set screws against cross bar with adapter bracket approximately centered to seat.

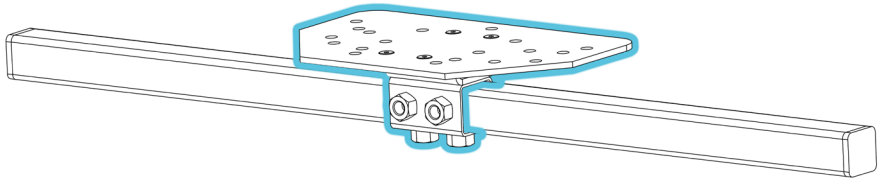

Slide cross bar half way through one tilt bracket, slide race wheel base plate adapter bracket and lastly slide cross bar through opposite side tilt bracket.

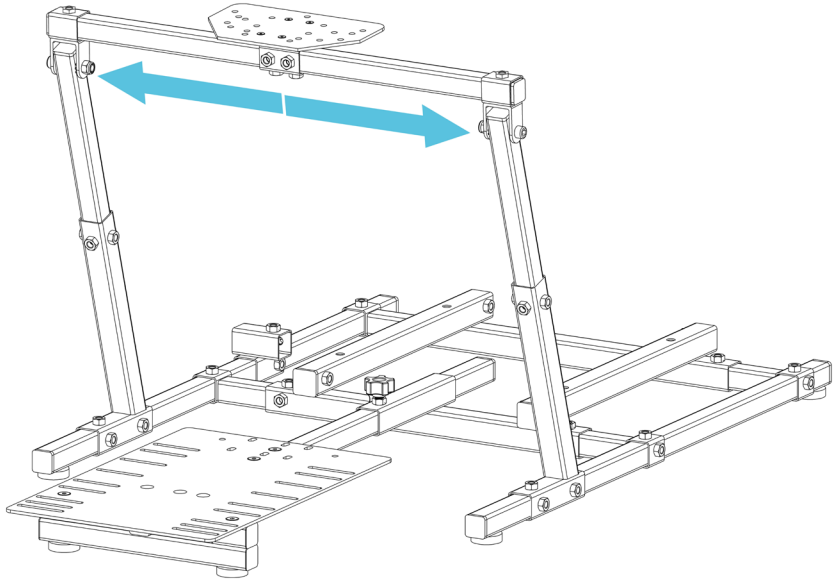

Position the crossbar on each side so that end plastic caps extend beyond the tilt bracket. You can adjust the overall width as needed after the frame is fully assembled. The cross bar may be flush with one side and protrude on the other, or it can extend on both ends.

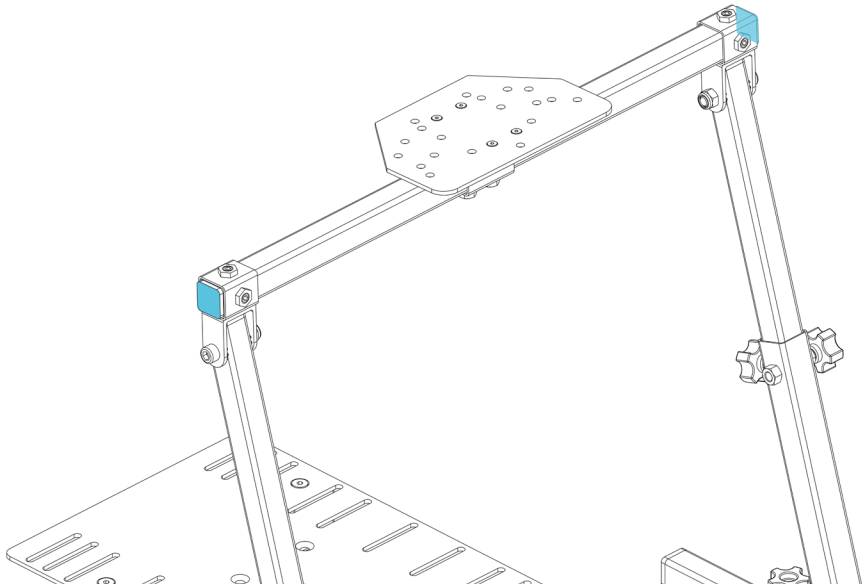

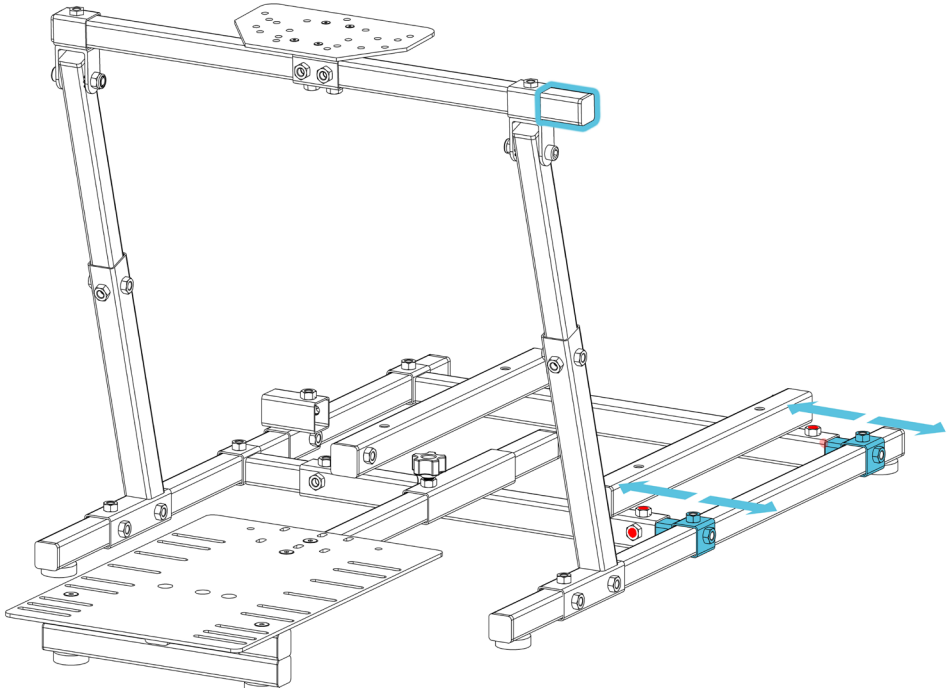

To extend either side, loosen frame side set screws and adjust side frame assembly to desired width.

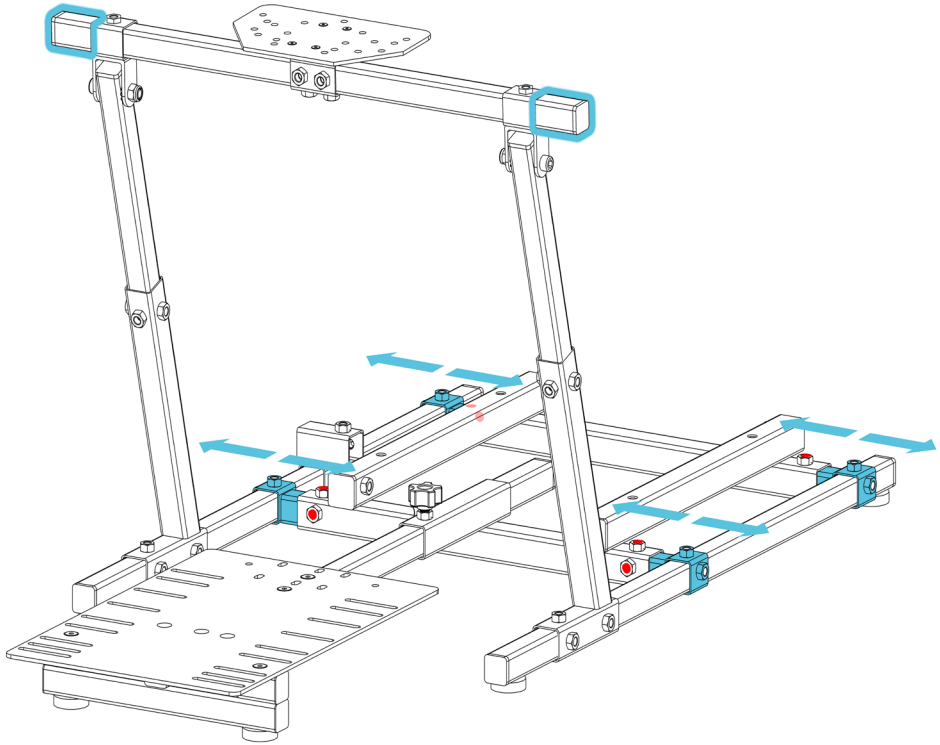

To ensure entire framework is square and plumb, tighten all set screws in the following order:

1. T-extensions to side support tubes, both sides (total of 8 set screws).

* Ensure side support tubes are pushed forward all the way until rear leveling feet make contact to rear T-extensions.

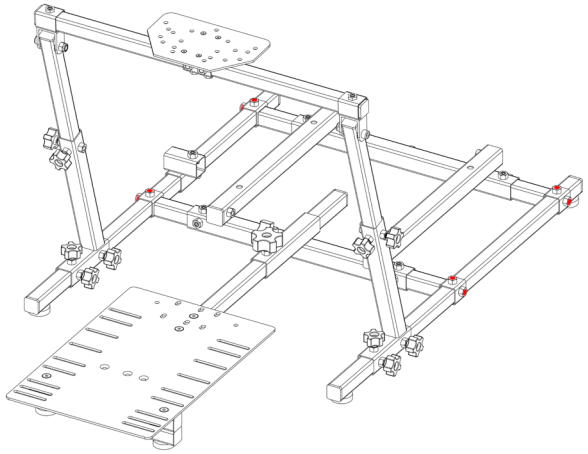

2. T-extensions to seat frame, both sides (total of 8 set screws).

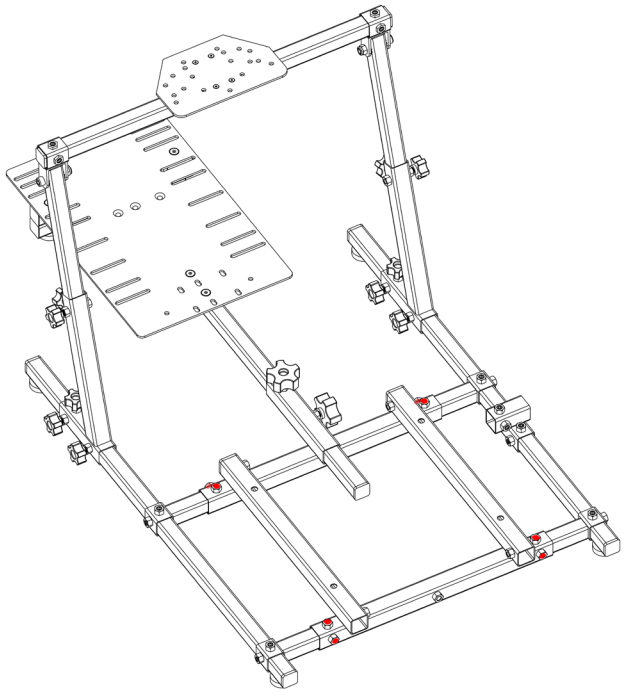

3. Lower knobs on upright posts (total of 6 knobs).

⚠ Ensure to not over tighten knobs to avoid stripping bolt inside knob plastic mold.

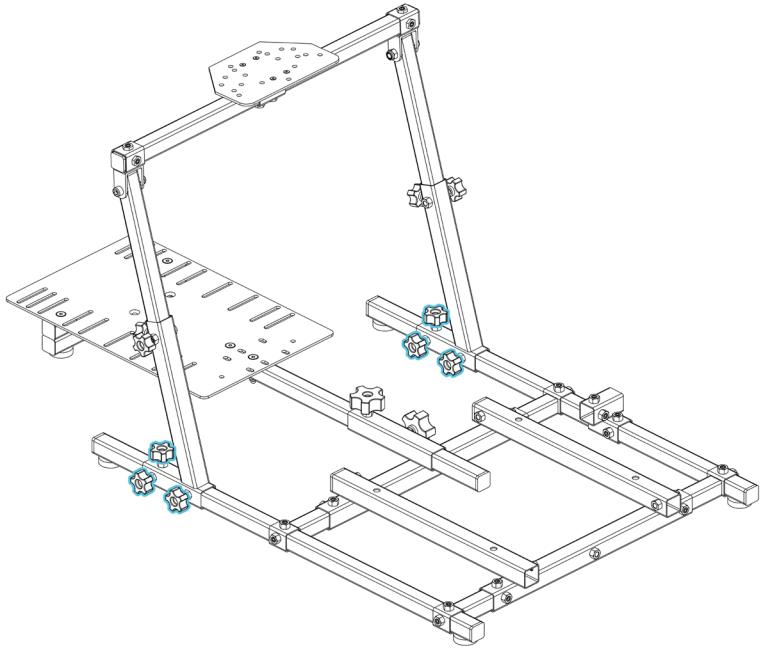

4. Upper knobs on upright posts (total of 4 knobs).

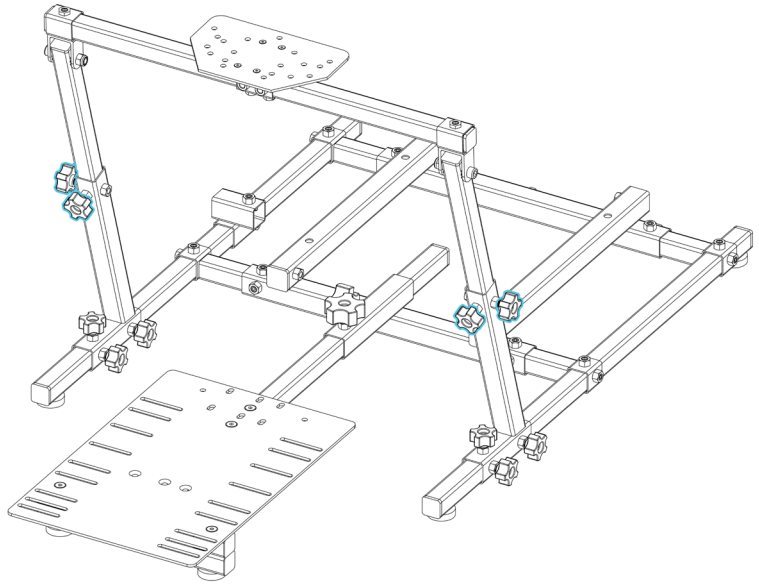

5. Tilt brackets set screws to cross bar (total of 4 set screws).

* Ensure cross bar goes past the outer sides of both tilt brackets.

Adjust each side T-extensions towards the seat frame to make frame width narrower if necessary.

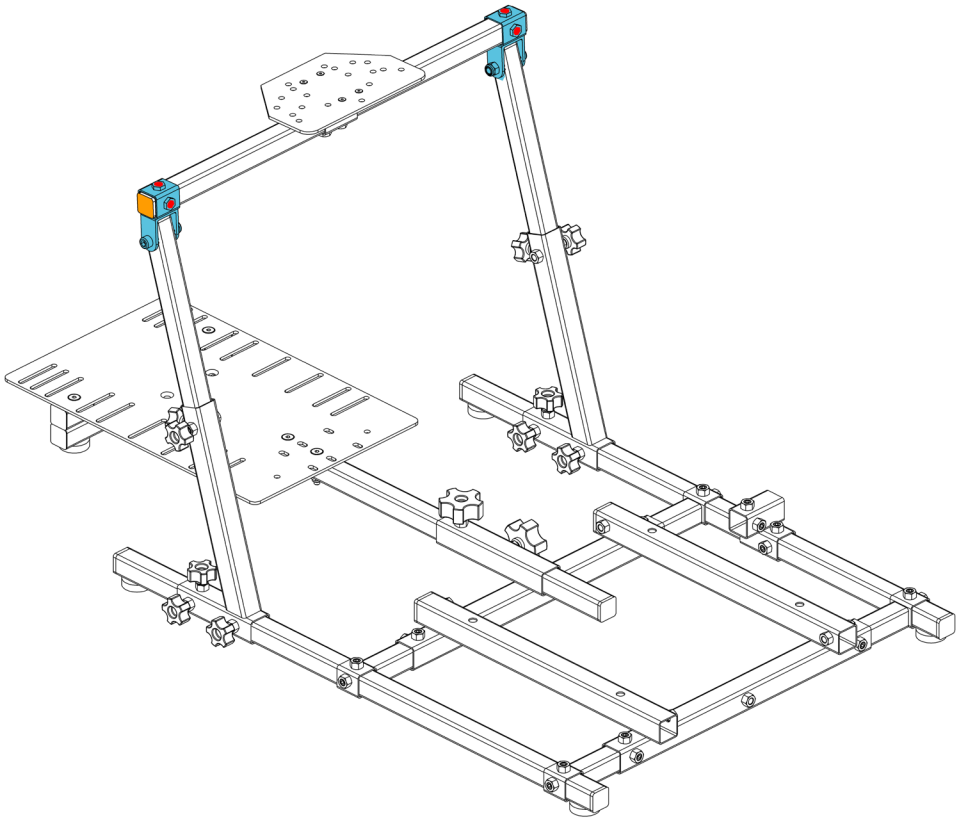

6. Tighten tilt brackets pivoting bolts with cross bar in approximate horizontal position and tighten pivoting bolts/nut on each side. Re-adjust wheel tilt if necessary after cockpit assembly is completed.

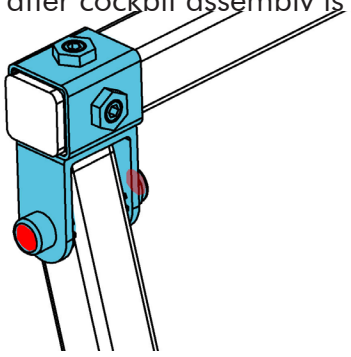

Install wheel base to plate with appropriate mounting hardware.

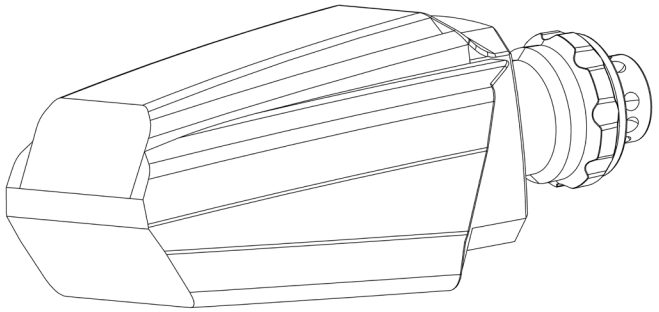

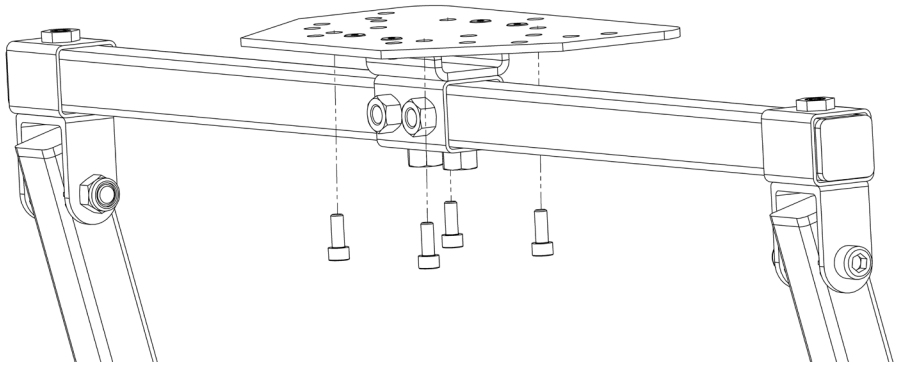

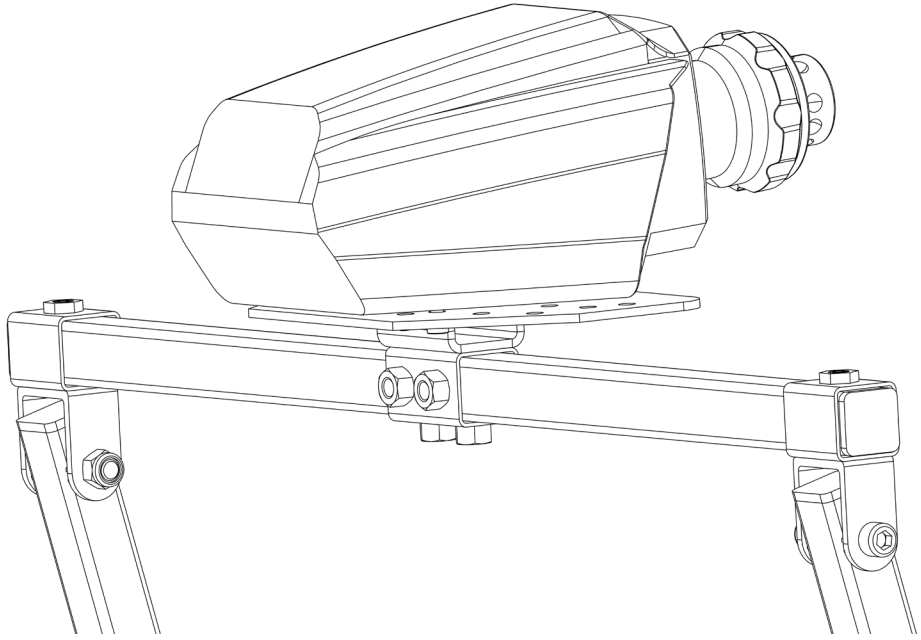

Steering wheel mounting pattern

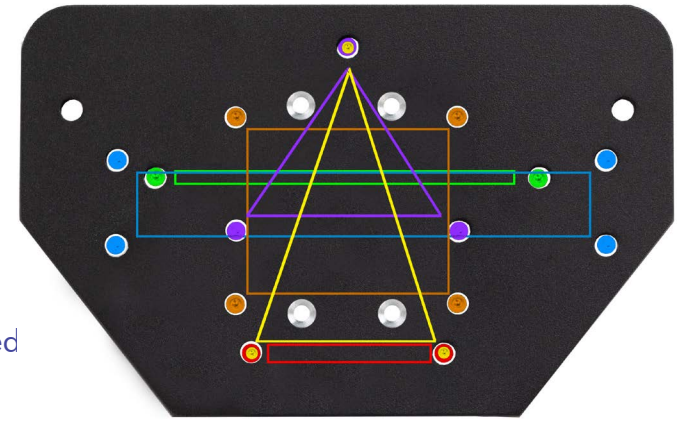

Logitech
Logitech Pro
Thrustmaster
Fanatec 1
Fanatec 2
(highly recommended
Simagic and Moza
Fanatec CSL wheel

⚠ Thrustmaster T818 and T598 wheels require TM factory base bracket.





⚠ For Thrustmaster wheels not supplied with mounting inserts such as: TMX, T150, Ferrari 458, use Thrustmaster factory clamp as shown above. For Fanatec CSL wheel, remove plastic legs and mount wheel base with three threaded inserts.

Tighten steering wheel plate pivot bolt using large (8mm) Allen key and 17mm combo wrench. Sit comfortably on the seat and make final adjustments before tightening all handle knobs. Wrap cables around none moving tubes with provided Velcro ties.

10. Use bolts, washers and small Allen key to mount steering wheel to steering plate. Use two (2) bolts from (bag C) and two (2) short bolts from (bag D) to mount Fanatec wheel with wheel base plate (Fanatec 1).

⚠ Highly recommended for Fanatec ClubSport wheel: remove factory base plate and mount wheel directly to OpenWheeler wheel plate with three (3) mount pattern (Fanatec 2).

Fanatec CLS DD wheel base installation.

Use hardware from bag D, labeled as "bag DD" and 3 T-slot inserts included in Fanatec CSL DD wheel base package to mount wheel base to wheel plate. Pre-install inserts to bolts by couple turns, using Fanatec 3 hole mounting pattern. Slide inserts to wheel base T-slots. Tighten down all three bolts and proceed with rest of installation.



1.



2.



3.

Adjust wheel arm reach by loosening side upright posts lower knobs.

* Make one direction adjustment at the time to maintain framework squareness.

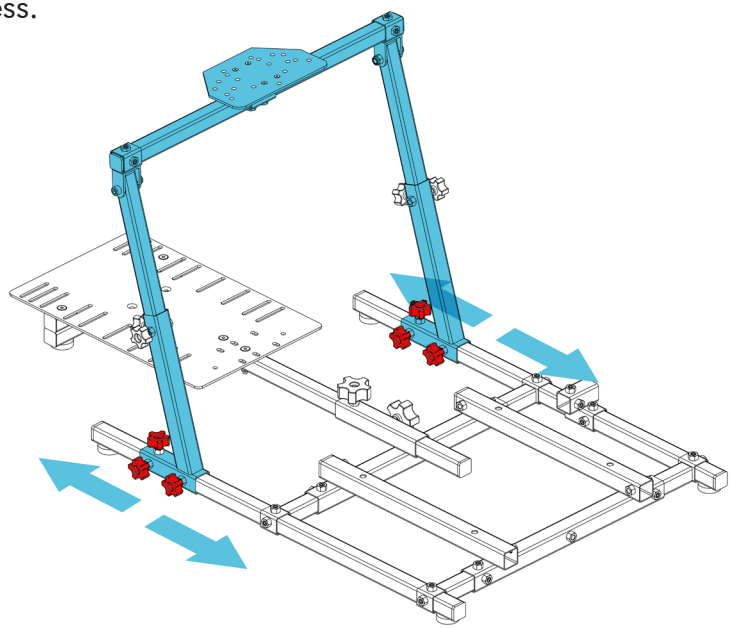

Adjust wheel height by loosening side upright post upper knobs.

* Make one direction adjustment at the time to maintain framework squareness.

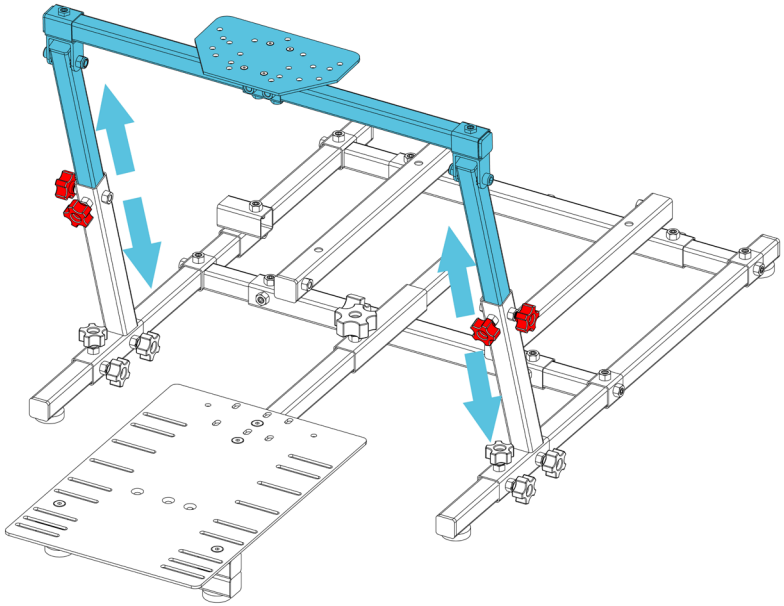

Use torpedo level on horizontal cross bar. Once aligned and height adjusted, mark vertical columns at the top edge of side upright posts with sharpie for easier reset if bar is removed frequently.

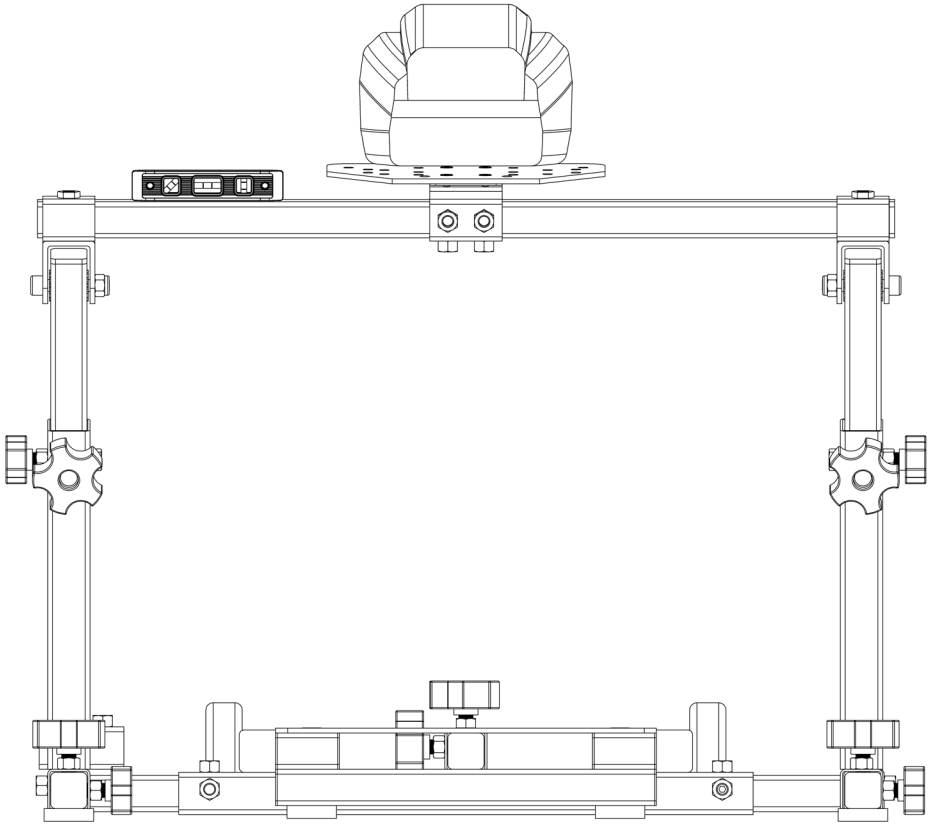

Optional. Install gear shift mount side bracket and adapter plate on top of upper L bracket.

Install lower L bracket to 4way coupling

Install Upper L bracket to lower L bracket.

For certain models shifters and handbrakes, install adapter plate on upper L bracket.

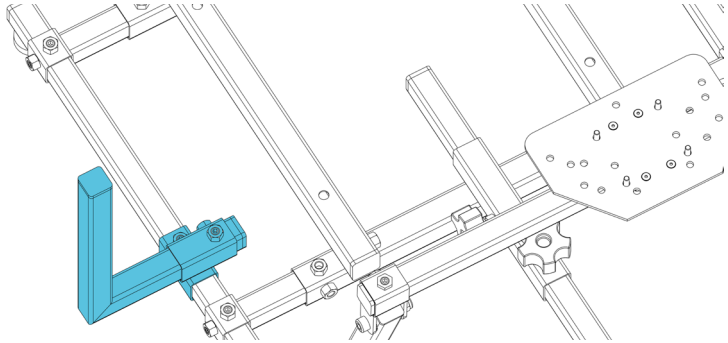

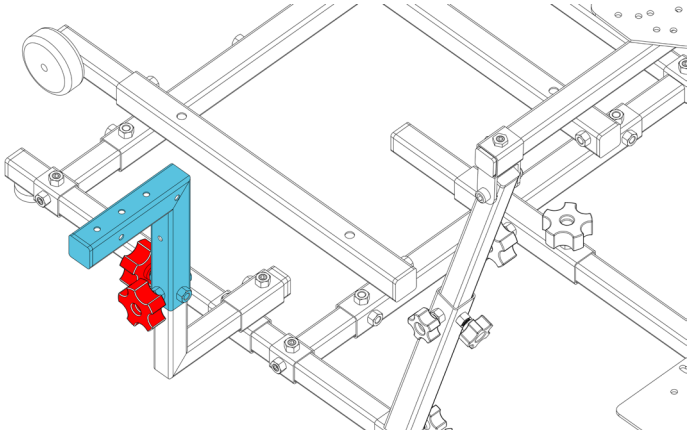

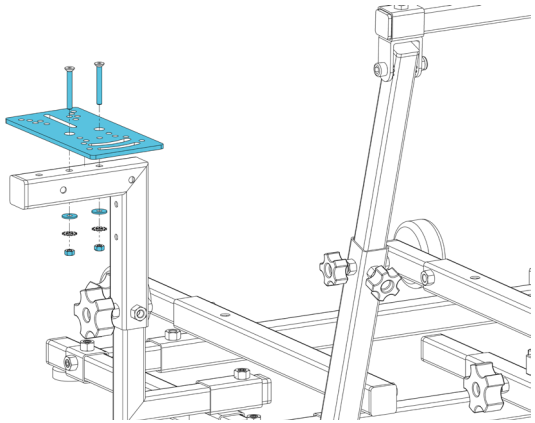

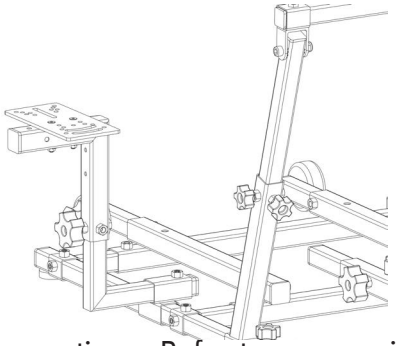

Flight sim add-on modular options. Refer to appropriate add-on kits for detailed assemblies.

Side by side HOTAS style flight sim controls add-on installation (configuration #1 or #2 and #4).

Add 4 way coupling on each side support tubes. Coupling can be installed behind front T-extensions or in front. Follow add-on kit assembly manual for detailed installation steps.

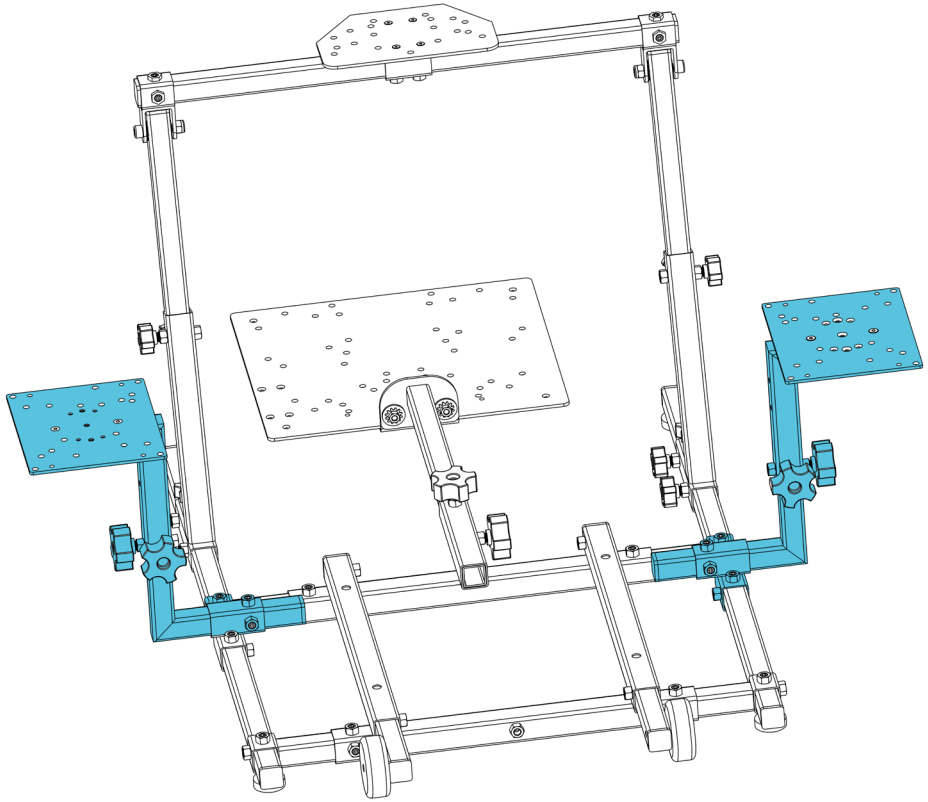

General and commercial aviation add-on to DD framework (configurations #5 or #8).

Disconnect race wheel cross bar at vertical columns and upright posts.

Install throttle quadrant plate and vertical column to right side upright post.

Adjust right side frame assembly sideways at the right side T-extensions.

Remove throttle quadrant assembly at vertical column to right side upright post when not used and re-assemble cross bar assembly with race wheel.

Assemble rudder plate to yoke upright post and connect it to seat frame center tube when in use. Exchange it with race pedal plate assembly when swapping setups at seat frame center tube disconnect point, held by pair of quick release knobs.

Side control upper L brackets can be flipped pointing towards seat and forming C shape with lower L brackets if necessary.

Follow add-on kit assembly manual for detailed installation steps.

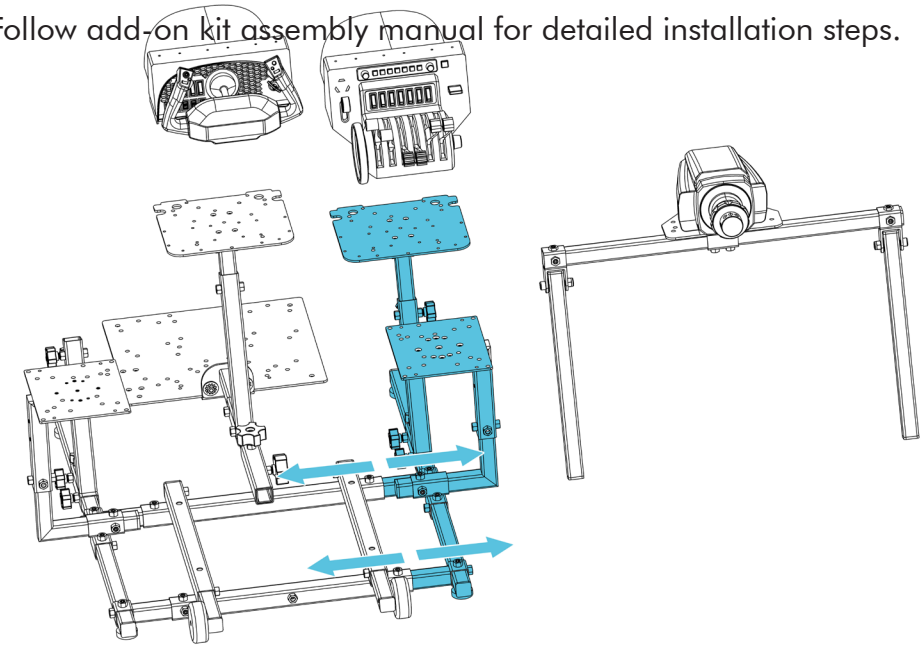

Helicopter sim setup add-on to DD framework (Configurations #4, #6 and #11)

Add collective bracket to left side support frame. Depending on length of collective, vertical pivoting bracket can be installed in front of rear t-extension tube or behind it. Follow assembly instructions in each kit specific manual. Hot swap between sim racing pedals and flight sim rudder pedals by loosening pair of knobs

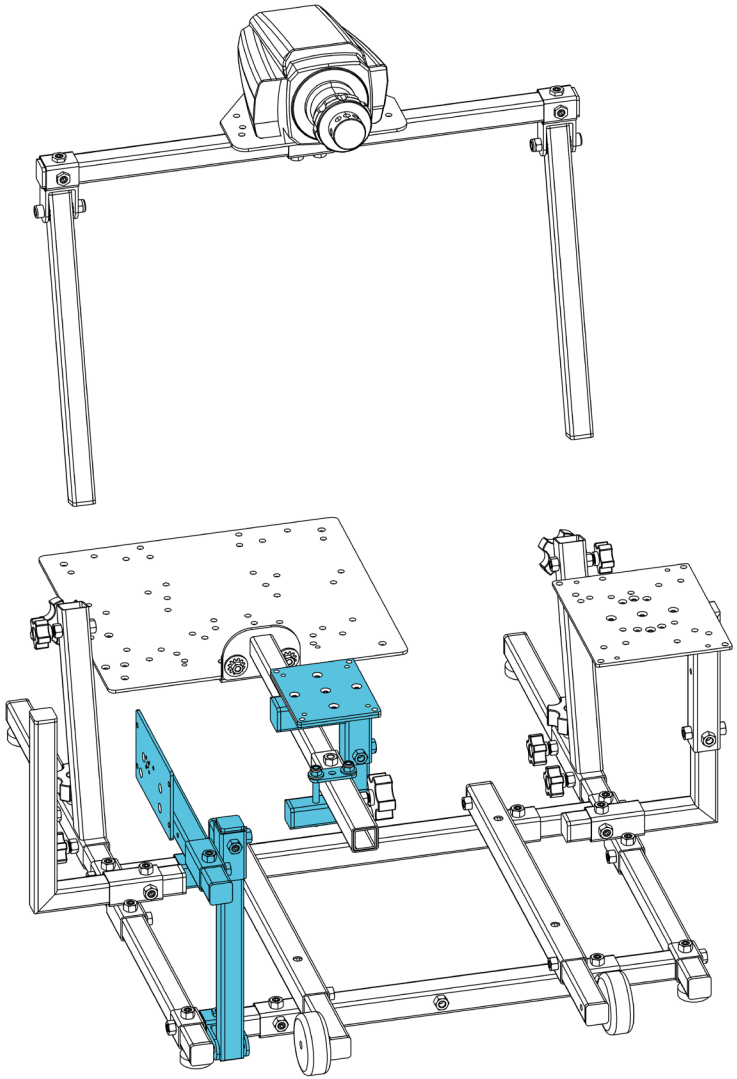

Upgraded kit with cross bar add-on for heavier control loaded (force feedback) yokes, paired with thicker HD base plates. Option to mount throttle quadrant on the same plane as the yoke, Cessna Vernier style throttle quadrant. Refer to online store for controls compatibility list.

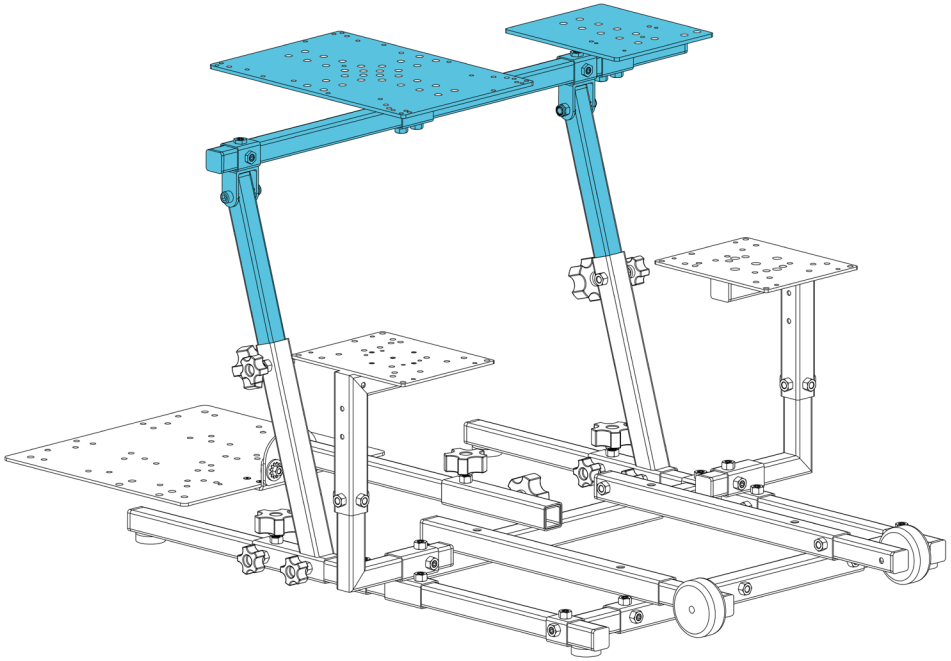

Specifications:

Recliner: max: 170 degrees
Construction: tubular steel frame with elastic strap supports
Seat Materials: high-density cold cure foam filling; Fabric, Steel chassis

Instructions during use and care:

Move simulator around with caution to avoid collision.
Keep out of direct sunlight and outdoor use.
Watch fingers when adjusting recliner.
Placing heavy or sharp objects on the seat may damage the surface material.
Do not use abrasive or chemically aggressive materials on the seat.
Use dry cloth or soft brush to clean the chair.

Dimensions:



Warranty Information

Return Policy

Terms And Conditions

http://homeracer.com/ow-termsandconditions.html













