OpenWheeler Flight Simulator Add-on Kit

Configuration #3 Combat Simulation

Side By Side Throttle and Stick, HOTAS

Assembly Manual
And
Optional Accessories



Assembly instruction manuals available at:

http://bit.ly/ow-manuals

V1.3 060726

by SimFab®

WARNINGS:

Proceed with caution and extra attention when warning signs are present during installation instructions manual.

WARNING

Choking hazard, small parts. Not for children under 5 years old.



WARNING

Keep hands and fingers clear of pinching points, and hinging metal parts.

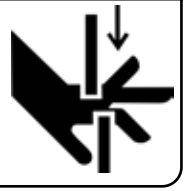

If your item is damaged, defective or missing parts, please contact us first directly at Email: info@HomeRacer.com or
Toll Free: 1-888-299-2746

As the manufacturer, our knowledge of your new product ensures that we will be able to assist you promptly and accurately.

For invoices and other price information, please refer to your market place account for more details. Alternatively, you can always email us at info@HomeRacer.com

Table of Contents

Parts list..... 4
Configuration #2 compatibility 6
Universal side brackets installation..... 7
Plates installation.....9
Flight controls installation and mount pattern.....11
Specifications, Warranty, Terms and Conditions.....18

Parts list

1. Upper L bracket (2)

2. Lower L bracket (1)

3. Lower L bracket mounting hardware (2)

⚠ Use 2nd lower L bracket from base package: Gen3 OpenWheeler sim racing cockpit. In case you are missing 2nd lower L bracket, please reach out to us for replacement.

4. Flight controls stick lower plate

5. Flight controls stick upper (stick base cover) plate

6. Flight controls throttle plate

7. Upper L brackets quick disconnect knobs (4)

8. Stick lower plate and throttle plate to upper L bracket hardware: bolts (4); washers (4); lock washers (4); nuts (4); 4mm Hex key

9. Throttle control to plate mounting hardware:

a) Thrustmaster Warthog, WinWing Orion throttle:

bolts (4); washers (8); lock washers (4); nuts (4)

b) VirPil throttle mounting hardware: bolts (4), 3mm hex key

10. Stick upper plate (stick base cover) to lower plate hardware:

bolts (4); washers (8); lock washers (4); nuts (4)

11. Stick mounting hardware:

a) Thrustmaster Warthog, VirPil, VKB sticks mounting hardware:
bolts (4); 2.5mm hex key

b) WinWing stick mounting hardware: bolts (4)

12. Velcro ties for cable management (6)

⚠ Use wrenches included in base package: Gen3 OpenWheeler sim racing cockpit:

* 5mm Hex Key

* 8mm Hex key

* 10mm combo flat wrench

Compatibility

Flight sim add-on kit configuration #2 is compatible with the following brands and models:

1. Thrustmaster Warthog stick and throttle
2. VirPil Sticks, throttle and control panels
3. WinWing sticks and Orion throttle
3. VKB Gunfighter stick



Installation

Universal side brackets installation

1. Insert lower "L" bracket to upper "L" bracket. Use either long or short arm of lower "L" bracket depending on height position adjustment. Mount pair of handle knobs as shown below.



2. Use flathead screwdriver to wedge out plastic cap from front/side frame tube.



3. Insert lower “L” bracket to front/side tube of the seat frame. Install pair of bolts into welded nuts of the frame.

⚠ Depending on setup and preference, switch to either long or short Lower L bracket arm.

Repeat above steps for left hand side bracket set.



⚠ Optional turn upper L bracket pointing forward, turn plates 90 degrees for extra 3” arm reach.



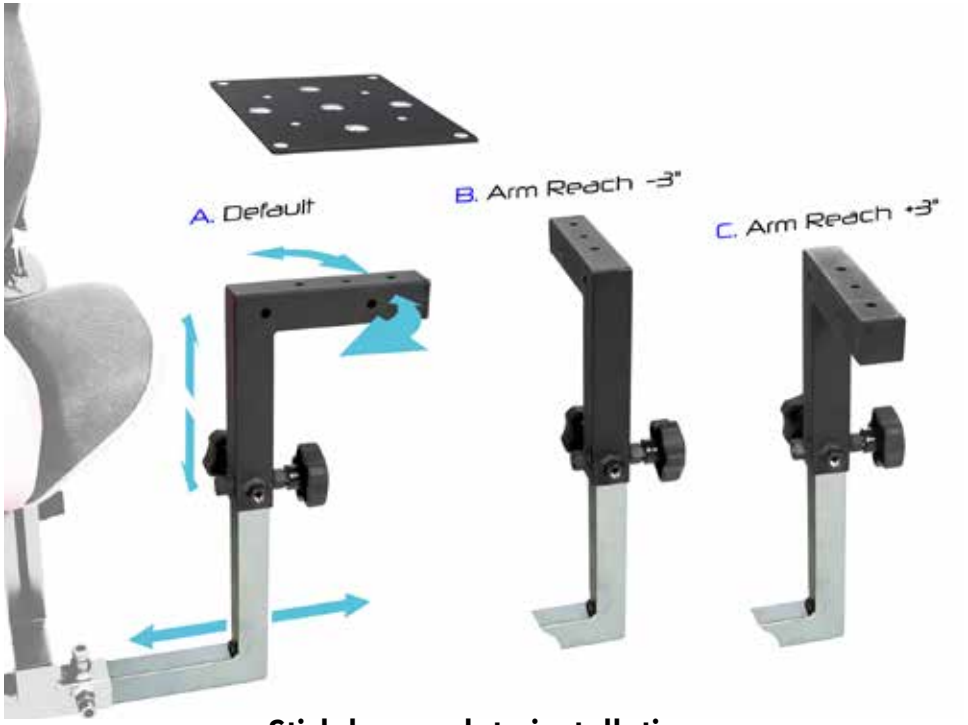

Stick lower plate installation

4. Mount stick lower plate and throttle plate to upper support brackets by using pair of countersink bolts, washers, tooth washers and nuts per plate.



5. Remove stick base factory plate from Warthog, VirPil and VKB flight sticks and replace it with OpenWheeler upper (stick base cover) plate.

⚠ WinWing flight stick does not require factory plate removal.

6. Depending on brand and model controls use included mounting hardware to hard mount stick and throttle to each plate.

Controls mount pattern:

Thrustmster Warthog throttle



Thrustmaster Warthog stick

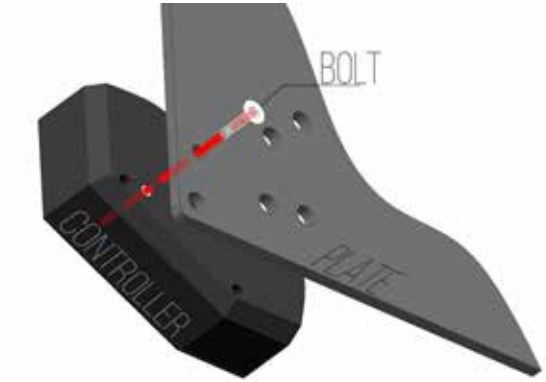



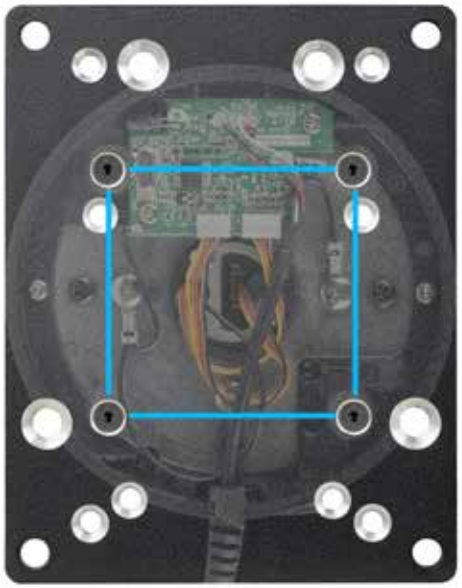



VirPil Throttles and Control Panels

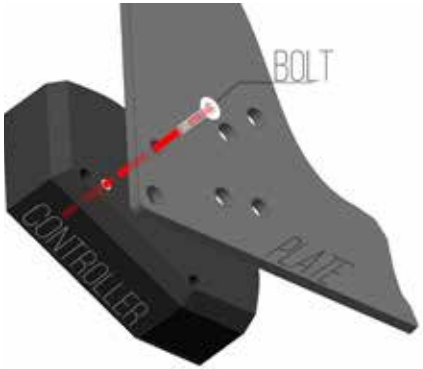







VirPil stick

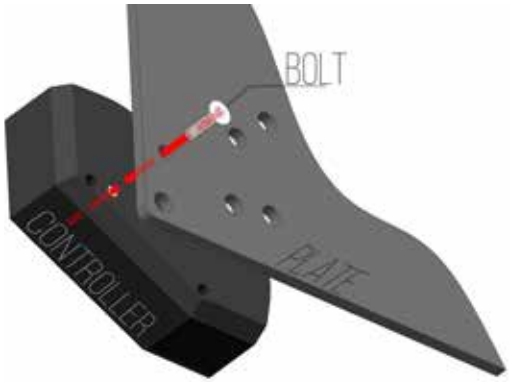



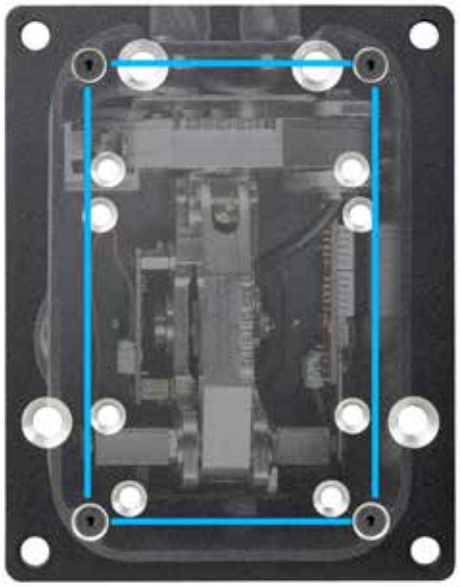



VKB Gunfighter Stick

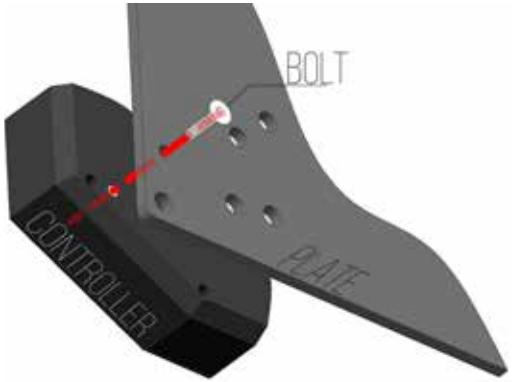



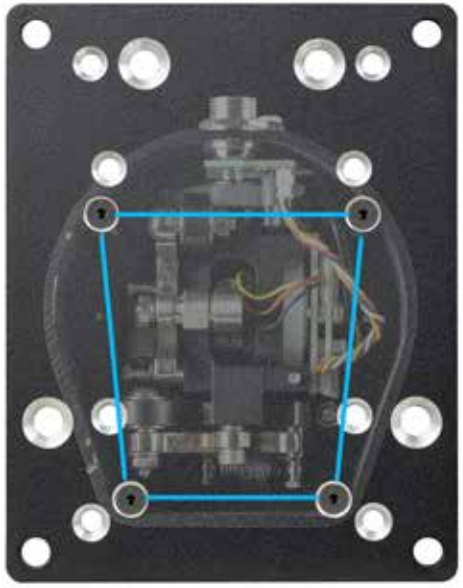

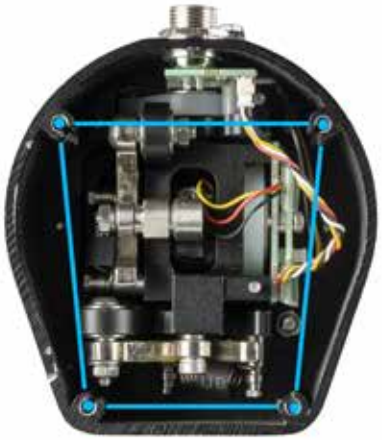

WinWing stick

⚠ WinWing flight stick does not require factory plate removal.



Flight Stick upper (base cover) plate to lower plate installation

7. Mount upper to lower stick plate by using included mounting hardware.



Specifications:

Recliner: max: 170 degrees
Construction: tubular steel frame with elastic strap supports
Seat Materials: high-density cold cure foam filling; Fabric, Steel chassis

Instructions during use and care:

Move simulator around with caution to avoid collision.
Keep out of direct sunlight and outdoor use.
Watch fingers when adjusting recliner.
Placing heavy or sharp objects on the seat may damage the surface material.
Do not use abrasive or chemically aggressive materials on the seat.
Use dry cloth or soft brush to clean the chair.

Dimensions:



Warranty Information

Return Policy

Terms And Conditions

http://homeracer.com/ow-termsandconditions.html

