Flight Simulator Add-on Kit

Configuration #2 Combat Simulation

Side By Side Throttle and Stick, HOTAS

Assembly Manual



V7.1DCS EU 083126

This manual has been optimized for digital preview

SimFab®

If your item is damaged, defective or missing parts, please contact us first directly at Email: info@SimFab or
Toll Free: 1-888-299-2746

As the manufacturer, our knowledge of your new product ensures that we will be able to assist you promptly and accurately.

For invoices and other price information, please refer to your market place account for more details. Alternatively, you can always email us at info@SimFab.com

WARNINGS:



Proceed with caution and extra attention when warning signs are present during installation instructions manual.







Table of Contents

Parts list.....4

Parts images.....5

Flight sim add-on kit, Configuration #2 compatibility 6

Universal side brackets installation.....7

Plates installation.....9

Plates mounting pattern.....10

VirPil controls installation.....13

Flight controls installation and mount pattern.....15

Upper to lower stick plates installation.....24

Parts list

1. Upper L bracket (2)

2. Lower L bracket (2)

3. Lower L bracket mounting hardware (4) pre-installed to frame

4. Flight controls stick lower plate

5. Flight controls stick upper plate

6. Flight controls throttle plate

⚠ default control base plates **B** and **C** can be substituted with alternative plates upon request.

7. Upper L brackets quick disconnect knobs (4)

8. Stick lower plate and throttle plate to upper L bracket hardware: bolts (4); washers (4); lock washers (4); nuts (4)

9. Throttle control mounting hardware:

a) Thrustmaster Warthog, Viper, Winctrl Orion, Moza MTP:

bolts (4); washers (4); lock washers (4); nuts (4)

b) VirPil throttles and control panels mounting hardware: bolts (4)

c) Winctrl Orion2, VKB STECS Mini throttles mounting hardware: bolts (4), lock washers (4) washers (4), nuts (4)

d) VKB STECS Mini+, Standard, Max series controls mounting hardware: bolts (4), washers (4), Wing nuts (4)

e) Moza MTQ throttle control mounting hardware: bolts (4)

10. Side stick mounting hardware:

Revision Note:
The socket head zinc-plated bolts connecting upper and lower plates, shown in the illustrations have been replaced with black steel countersunk bolts.
Actual hardware supplied may differ slightly from the illustrations but will function as described in the assembly instructions.

a) stick upper plate to lower plate hardware:

bolts (4); washers (4); lock washers (4); nuts (4)
b) Thrustmaster Warthog, AVA, Winctrl Orion2, VirPil, VKB Gunfighter, Moza AB6 sticks mounting hardware:
bolts (4)
c) Winctrl Super Taurus stick mounting hardware: bolts (4)

11. Velcro ties for cable management (6)

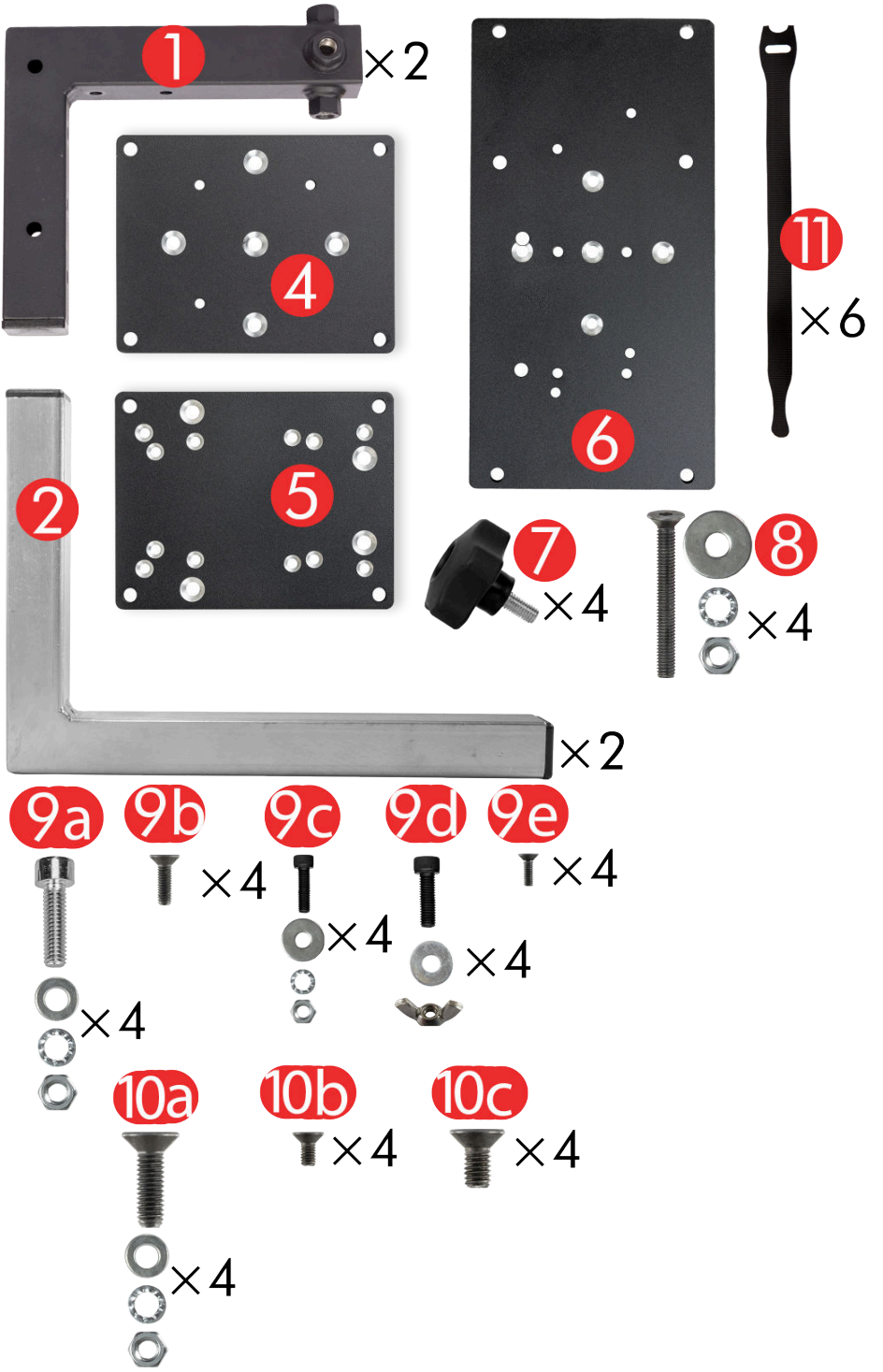
1
×2
4
6
11
×6
2
5
7
×4
8
×4
×2
9a
9b
×4
9c
×4
9d
×4
9e
×4
×4
10a
×4
10b
×4
10c
×4

Compatibility

Flight sim add-on kit configuration #2 is compatible with the following brands and models:

1. Thrustmaster Warthog stick and throttle, Viper TQS throttle
2. VirPil Sticks, throttle and control panels
3. Winctrl sticks and Orion throttle
4. VKB Gunfighter stick
5. VKB STECS/STEM throttle system and all variants.



Installation

Universal side brackets installation

1. Insert lower "L" bracket to upper "L" bracket. Use either long or short arm of lower "L" bracket depending on height position adjustment. Mount pair of handle knobs as shown below.



2. Use flathead screwdriver to wedge out plastic cap from front/side frame tube. Caps may be removed by default.



3. Insert lower “L” bracket to front/side tube of the seat frame. Install pair of bolts into welded nuts of the frame.

⚠ Depending on setup and preference, switch to either long or short Lower L bracket arm.

Repeat above steps for left hand side bracket set.



⚠ Optional turn upper L bracket pointing forward, turn plates 90 degrees for extra 3” arm reach.



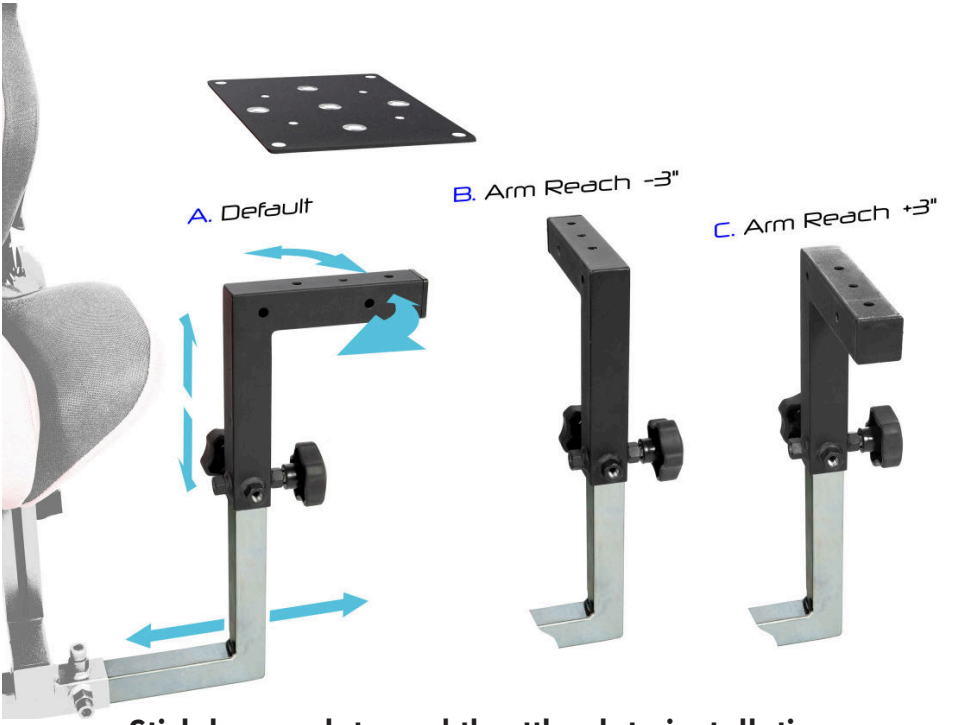

Stick lower plate and throttle plate installation

4. Mount stick lower plate and throttle plate to upper support brackets by using pair of countersink bolts, washers, tooth washers and nuts per plate.



5. Remove Thrustmaster Warthog stick base factory plate and hardware holding it, and replace it with SimFab cover (stick base cover) plate.

⚠Winctrl Super Libra does not require base plate removal.

VirPil later generation stick bases only require removal of factory hardware. Install SimFab plate over it, using SimFab selected hardware.

6. Depending on brand and model controls use included mounting hardware to hard mount stick and throttle to each plate.

Universal throttle plate, type B

⚠ Included in default DCS cockpit package or flight sim #2 add-on kit

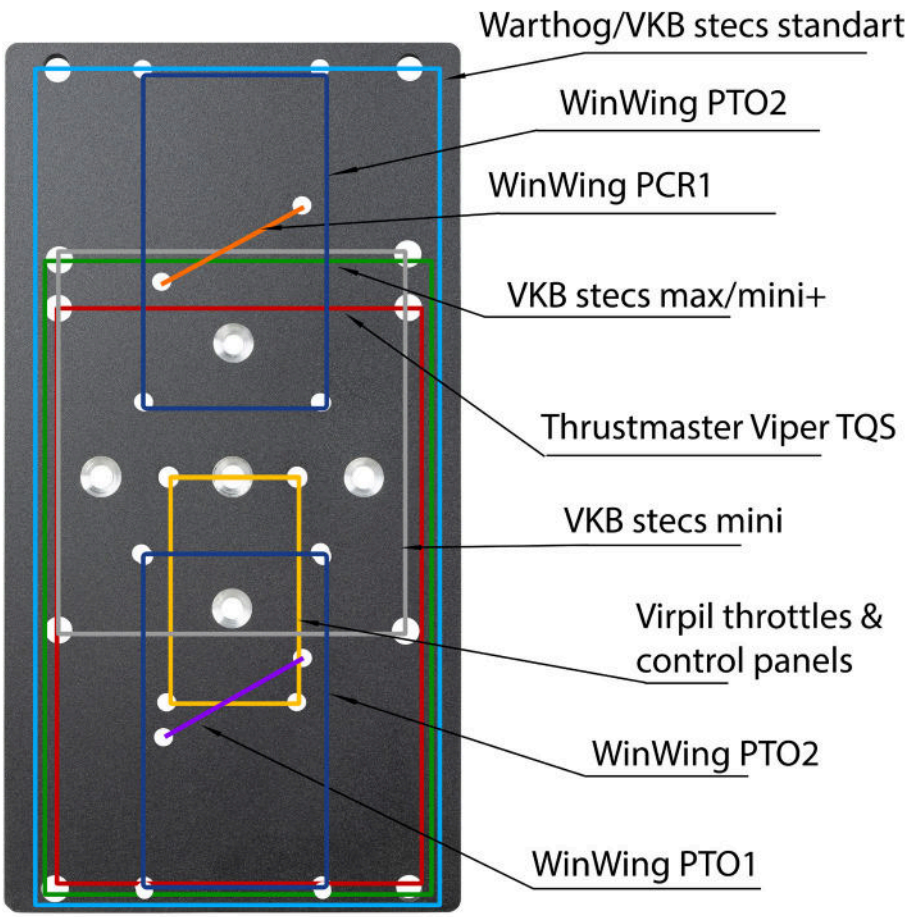

Universal base plate, type D

⚠ Optional compact plate does not overlap VirPil controls, allowing closer alignment of multiple panels.

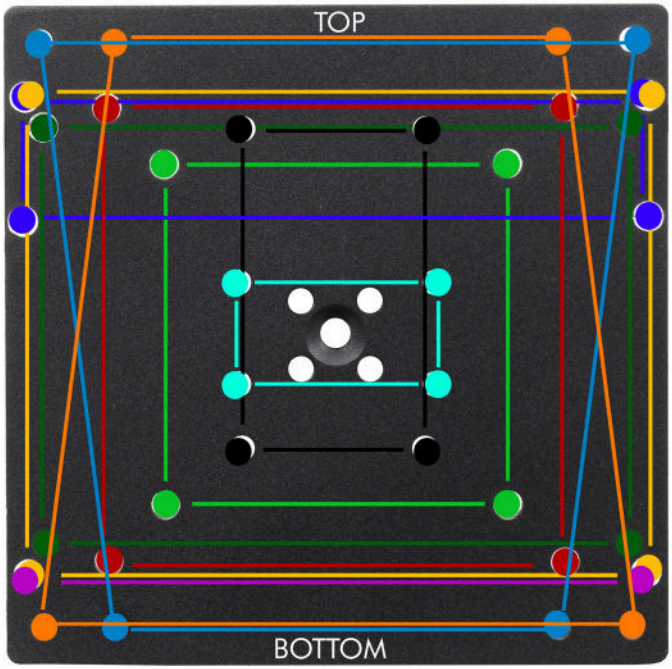

Universal base plate, type J

⚠ Optional base plate J covers following controls:

VKB Gladiator, VirPil CDT series throttles, Winctrl Ursa Minor Controls

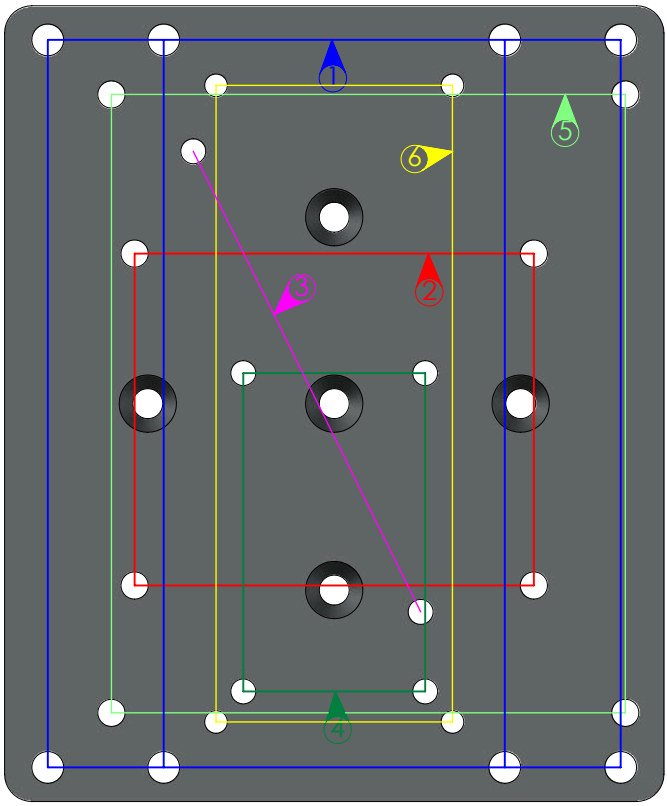

1. Virpil
2. VKB EVO
3. Winwing Ursa
4. Virpil - old
5. WINCTRL 32 AGP Metal
6. WINWING 32 ECAM Panel

⚠ Install VirPil control panels or throttles in the following order:

a) Pick appropriate pair of countersunk holes and run bolts (hardware #8) through plate holes.



b) Install VirPil control to plate (hardware #9B).



c) Install plate to upper L bracket by aligning bolts to upper L bracket desired pair of holes. Install washers, tooth washers, nuts to bolts (hardware #8).



Controls mount pattern:

Thrustmaster Warthog throttle

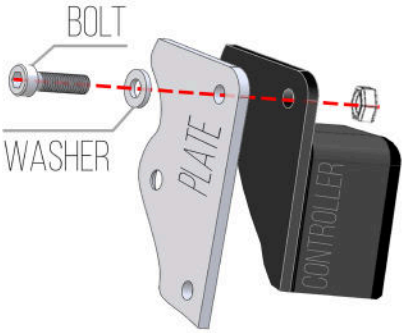







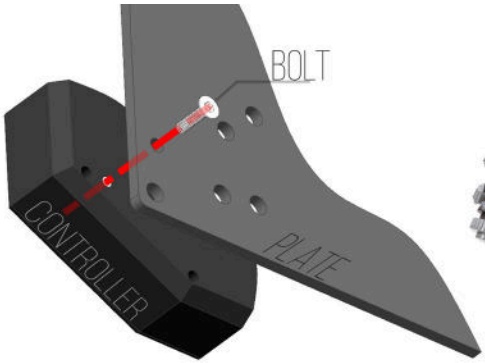
BOLT
CONTROLLER
PLATE



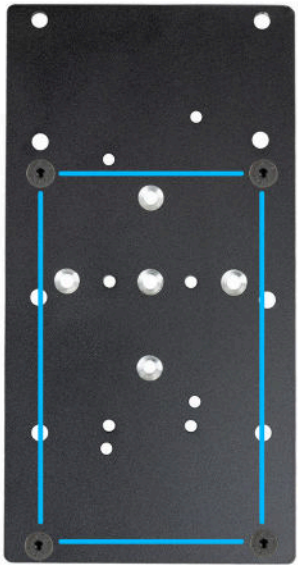



Thrustmaster Warthog and Winctrl Orion stick

⚠ Thrustmaster Warthog stick shown below, Winctrl Orion stick has same mounting pattern.

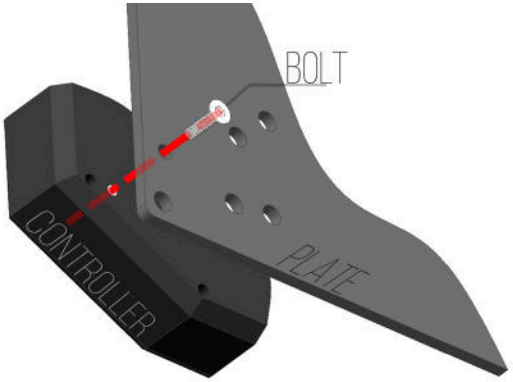



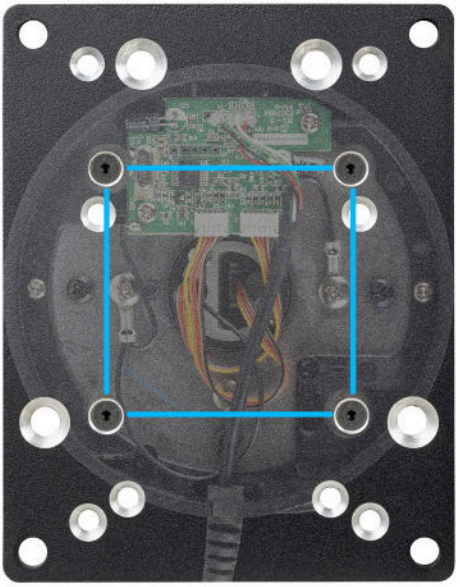

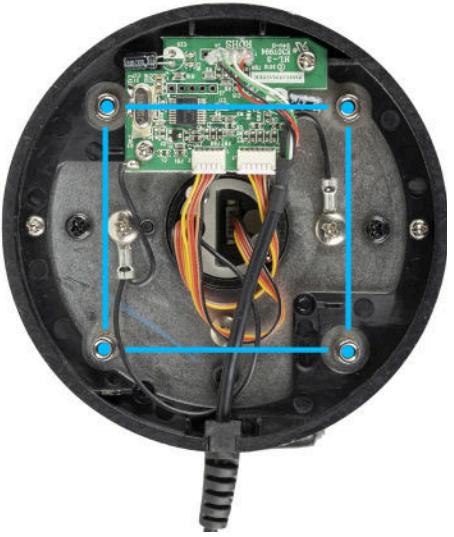

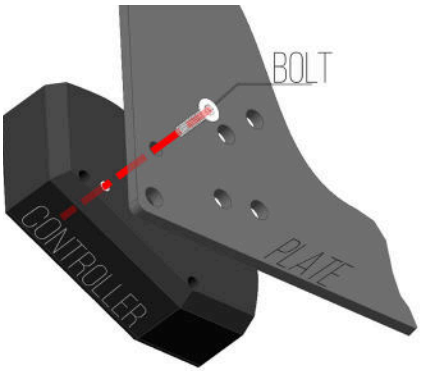
BOLT
CONTROLLER
PLATE


VIRPIL
MONGOOST-50
THROTTLE CONTROL SYSTEM





VirPil stick

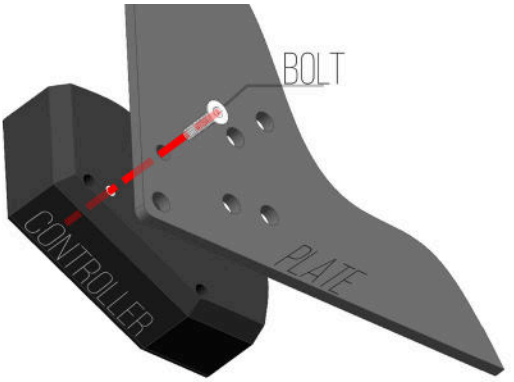



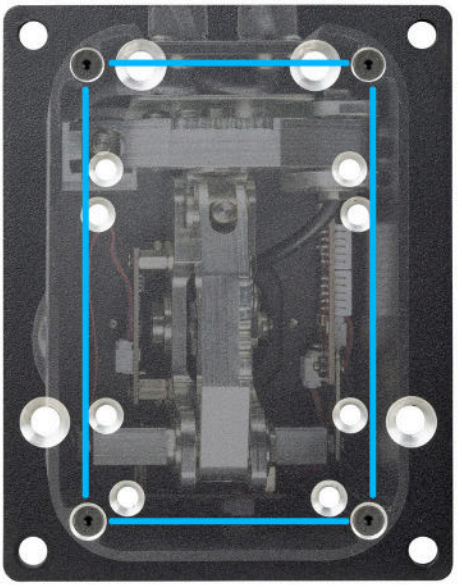

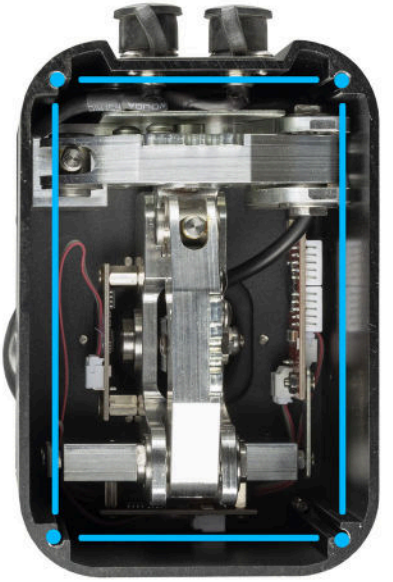

⚠ Use included throttle mount hardware in Bag 9c.

Install hardware through plate and throttle base on each corner hole as shown, with following order. Plate bottom side: bolt head, tooth washer, washer. Throttle top side: nut.

Leave hardware loose. Slide Winctrl mounting rails channel on nuts side.

Adjust rails and tighten bolts by using 3mm Allen key.

⚠ Do not over tighten bolts to avoid damage or stripping hardware.

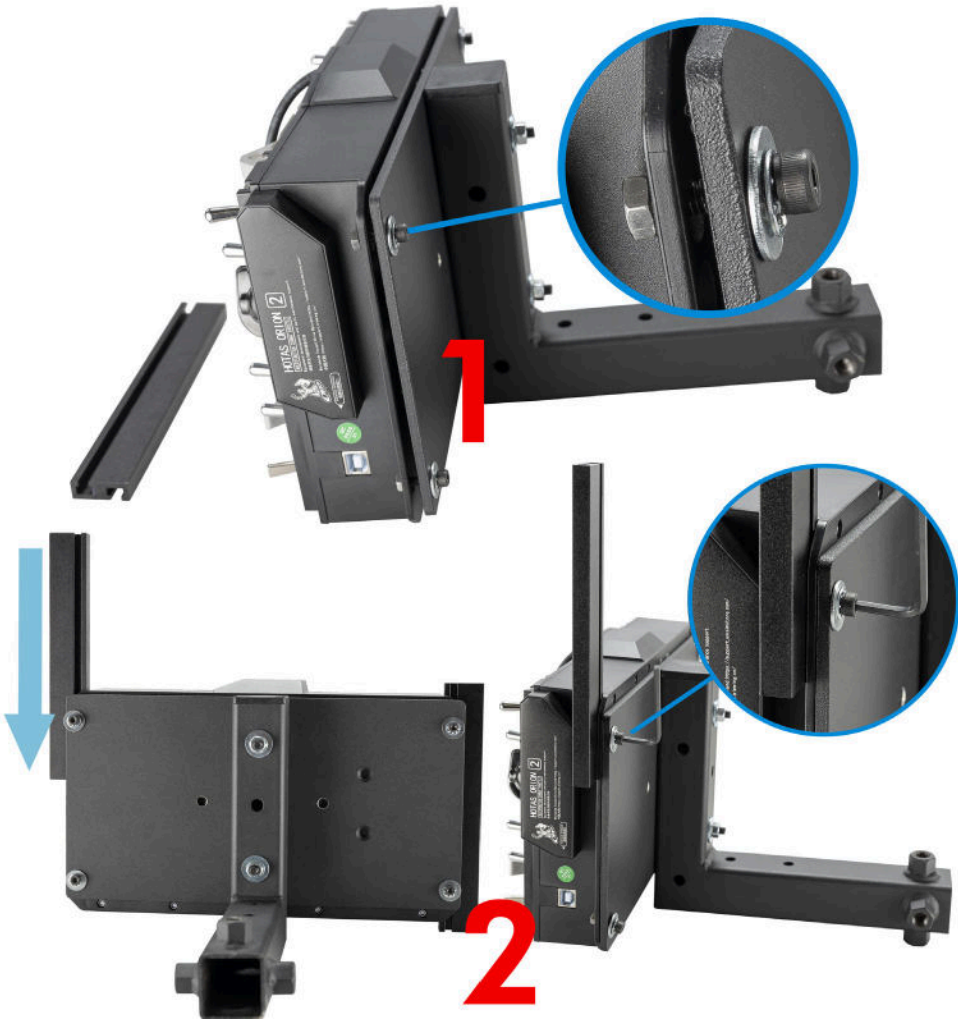

Winctrl Super Libra stick

⚠ Winctrl flight stick does not require factory plate removal.

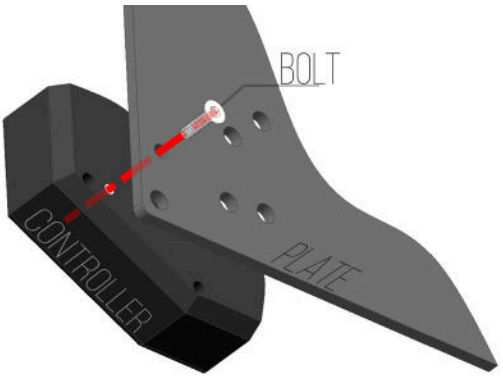



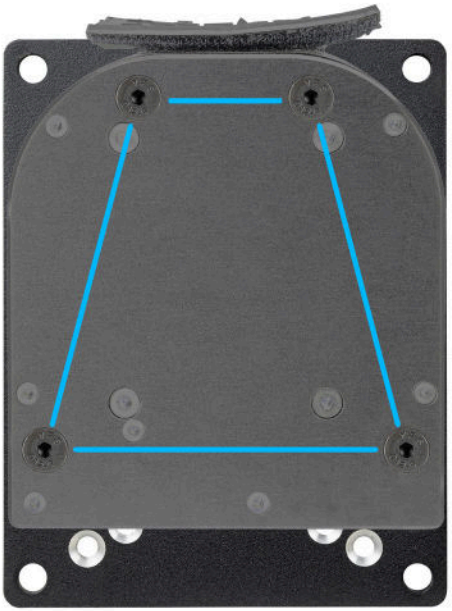

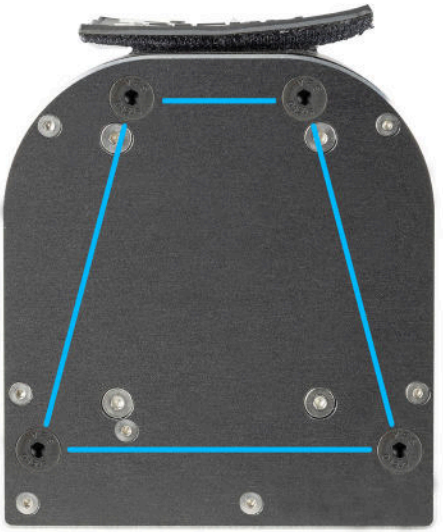

⚠ Turn cover (upper) plate at 90 degrees and find matching holes. Use Thrustmaster Warthog and alike bases mounting hardware: M4x12mm countersink bolts.

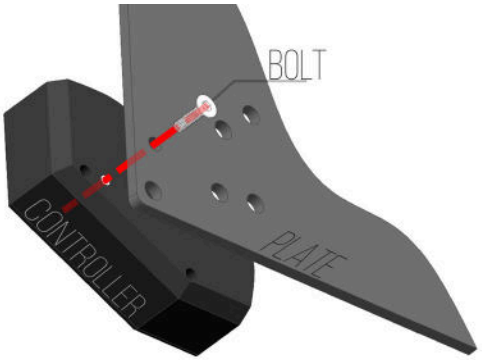



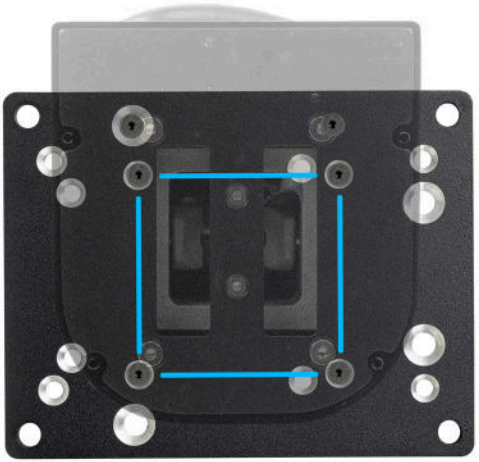



VKB Gunfighter Stick

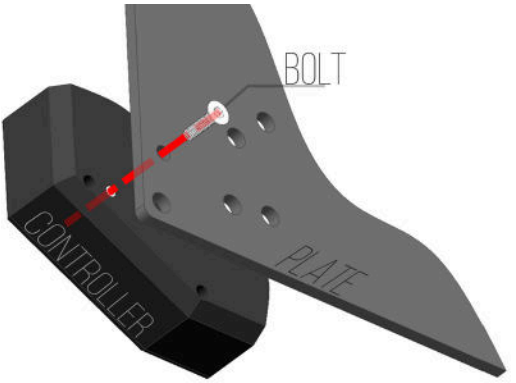



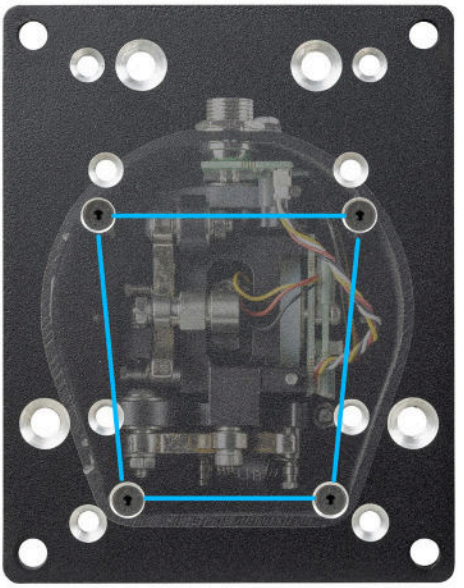

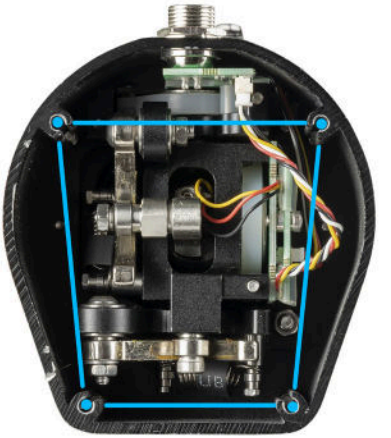

Flight Stick upper (base cover) plate to lower plate installation

7. Mount upper to lower stick plate by using included mounting hardware.

