Flight Simulator Add-on Kit

Configuration #11

Helicopter Collective Universal Mount Bracket Assembly

And Optional Accessories



Assembly instruction manuals available at:

http://bit.ly/ow-manuals

V2.4 060726

by SimFab.com

WARNINGS:

Proceed with caution and extra attention when warning signs are present during installation instructions manual.

WARNING

Choking hazard, small parts. Not for children under 5 years old.



WARNING

Keep hands and fingers clear of pinching points, and hinging metal parts.



If your item is damaged, defective or missing parts, please contact us first directly at Email: info@SimFab.com or
Toll Free: 1-888-299-2746

As the manufacturer, our knowledge of your new product ensures that we will be able to assist you promptly and accurately.

For invoices and other price information, please refer to your market place account for more details. Alternatively, you can always email us at info@SimFab.com

Table of Contents

Parts list.....6

Installation.....8

WinWing collective installation.....11
Collective adjustment.....13

Collective with short grip (WinWing).....14
Extra long grip (Apache).....14
VirPil collective installation, Apache grip, counterweight spring kit. 15

Adjustment.....18

Cable management and breaking apart cockpit for storage or moving it away.....21

Installation and use of flight sim add-ons to DD frame (chassis)....23

Specifications, Warranty, Terms and Conditions.....27

Parts list

1. Pivot bracket assembly
2. Collective arm bar
3. 4way coupler
4. Short connecting bar
5. Collective universal plate
6. Hardware

A. Cable management tie wraps (6)

B. M10x12mm set screws (6)

C. Plate mounting hardware:

M6x40mm bolts (2), wide washers (2), lock washers (2), nuts (2)

D. WinWing collective mounting hardware:

M6x15mm bolts (4), washers (4), lock washers (4), nuts (4)

E. VirPil collective base M8 retaining tooth washer.

VirPil collective counterweight spring kit bolt: M5x15mm and M5 tooth washer.

7. 8mm flat open wrench

Use tools included in base package SimFab cockpit, not included in this kit

1. 17mm open wrench
2. 10mm open wrench
3. 8mm Allen key
3. 5mm Allen key
5. 4mm Allen key

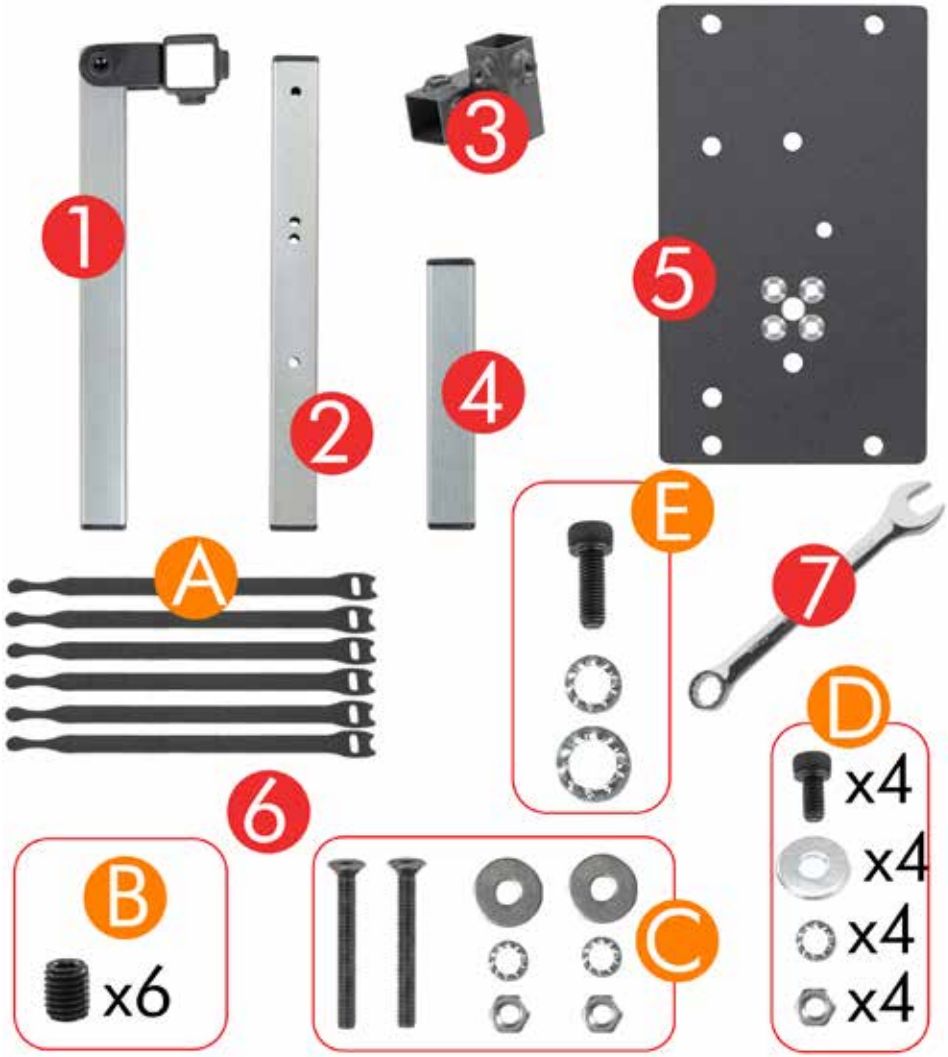

Installation

Bracket to seat frame installation.

Stand alone bracket (without "advanced modular side mount kit"). For installation with AMSM kit, skip to page 28.

1. Pry out frame side end cap at rear left corner of frame and pre-install pair of M10x20mm bolts.



2. Slide in short connecting bar to frame approximately 2 inches and tighten down both bolts. ⚠ Ensure there is enough tube inside frame to secure bolt to it.



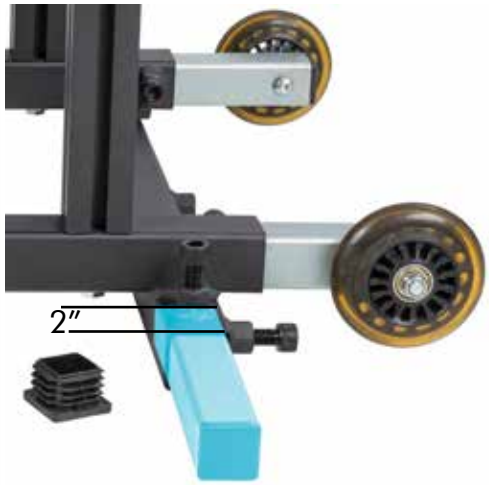

3. Slide in pivoting adapter bracket to short connecting bar at the end and tighten down pivoting bracket by pair of M10x12mm set screws.



4. Slide down 4way coupler approximately half way and secure it to pivoting bar by pair of M10x12mm set screws.

⚠ Ensure 2way coupler is installed in the same direction as shown.



⚠ When collective control is used on stand alone bracket as illustrated above, it is recommended removing the fighter jet throttle bracket or using longer arm of lower L bracket mounted to seat frame for wider range of adjustment sideways, to make room for collective between seat and throttle.



Bracket to seat frame installation with "advanced modular side mount kit".

5. Slide out AMSM assembly out of seat frame and slide in collective pivoting bracket assembly to rear T-extension approximately two inches in. Secure bracket by pair of M10x12mm set screws.



6. Slide down 4way coupler approximately half way and secure it to pivoting bar by pair of M10x12mm set screws.

⚠ Ensure 2way coupler is installed in the same direction as shown.



7. Next steps apply for both stand alone collective installation or collective with AMSM kit.

WinWing collective installation

⚠ For VirPil collective skip to page 33.

Install adapter plate to collective arm bar at third and fourth holes left to right) by using pair of M6x40mm bolts, washers and lock nuts.

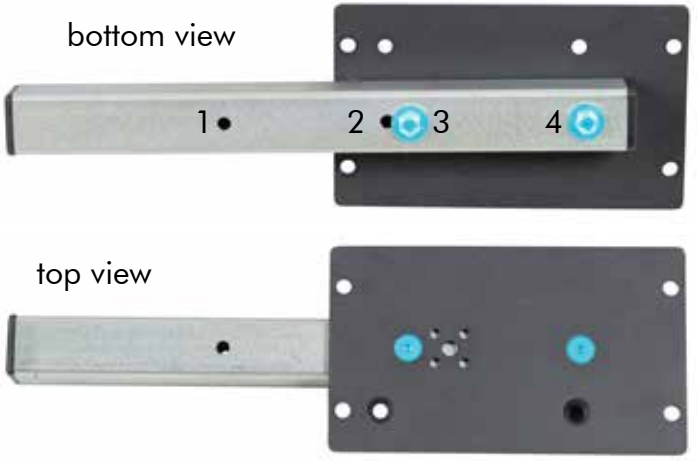

8. Install WinWing collective base to adapter plate by set of bolts/ washers, lock washers and nuts.



9. Slide collective arm bar to 4way coupler and secure it by pair of M10x12mm set screws.



10. Mount AMSM assembly back to seat frame.

Adjust Throttle distance to collective by sliding Lower L brackets in/out.

Adjust collective distance to seat by sliding T-extension in/out from seat frame. Ensure T-extensions have enough tube inside the frame to lock quick release knobs.

Adjust collective between throttle and seat by sliding it in/out on rear T-extension.

⚠ Ensure parallel relation between side rail and seat frame.



11. Collective grip adjustment.

A) Arm reach. Loosen pair of set screws on 4way coupler to arm bar and adjust fore/aft. ⚠ Refer to page 32 for grip base install behind pivoting tube. Applicable for longer grips such as VirPil Apache grip.



B) Collective base height. Loosen pair of set screws on 4way coupler to pivoting bracket bar and adjust up/down.



C) Pitch control angle range adjustment. Loosen pivoting bolt/nut and tilt bracket forward/backward.



12A. Use of collective with short grip.

Relocate collective bracket assembly to front tube of seat frame.

Reverse arm bar installation to collective base backwards.

Reverse pivoting bracket installation in front of short tube or T-extension bracket.

⚠ Same collective adjustments apply.



12B. Use of collective with extra long grip (Apache style).

Mount collective behind pivoting tube as illustrated. Mount arm bar in the mirror like reference to front of pivoting tube. Removal of plate and control is required to access bolts holding the arm bar.



13. VirPil collective installation with optional counterweight balance spring kit.

Install arm bar to plate by using pair of M6x50mm countersink bolts, washers, tooth washers and nuts. Use 5mm hex key and 10mm flat wrench.

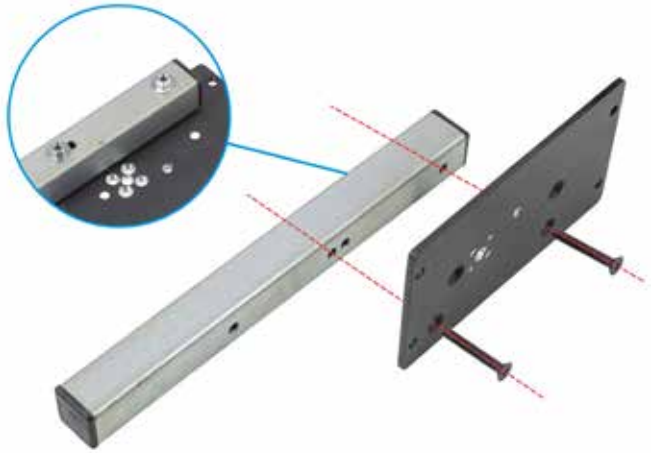

Remove Virpil factory bracket held by M8 bolt (5mm hex key) and 4 Phillips head screws.



Remove pair of bolts by using 2.5mm hex key.



Install counterweight spring kit. Ensure loading block is set to upper position (loose spring) as illustrated.

Skip to next steps if kit is not being used.



Place counterweight spacer in spring coil with black keyway matching the direction of spring end and install SimFab adapter plate by using Virpil longer bolts. Add SimFab included tooth washer between M8 bolt and washer.





Install arm bar to 4way coupler. Tighten pair of set screws on 4way coupler by 5mm hex key.

⚠ Arm reach fine adjustments will be made last.



Ensure grip is set at highest pitch point for the lightest spring tension. Position spring end retainer washer with spring wire into the washer channel. Guide washer to plate hole with fingers and insert SimFab included M5x15mm bolt through plate and washer holes. Install Virpil included nut and SimFab included tooth washer to bolt. Tighten bolt by using 4mm hex key and 8mm flat wrench, both included in SimFab kits.



Adjust VirPil collective base friction bolts under rubber caps (top and bottom of base). Adjust counterweight spring mechanism by 5mm hex key.



Adjust pivoting tube tilt for balanced pitch range. Test highest and lowest grip position to find optimal setting to personal preference.

⚠ Ensure tilt bolt is tight.





Adjust arm bar for optimal arm reach.

Adjust 4way coupler on pivoting tube for optimal height adjustment.



17. Use Velcro tie wraps to run all cables neatly around brackets and tubes. Ensure cables are not getting pinched or over stretched during re-adjustment.



18. To break down, store away or move your SimFab flight pit, disconnect each peripheral module/attached bracket at easiest breaking points as shown.



Installation and use of flight sim add-ons to DD frame (chassis).

⚠ To maintain squareness of DD frame, loosen one part and section at the time. Go back to DD kit installation process if frame or parts go out of alignment and no longer plumb and square.

Adding 4way couplers to side rail (left or right side)

Lift either side of seat and remove leveling feet. Use 2nd person to assist during process.

Loosen all three knobs on lower side of upright post and two knobs securing side rail to T-extension brackets.



Slide side rail forward and install 4way couplers.

⚠ Illustration below shows pair of couplers installed for helicopter sim collective bracket and fighter jet throttle. Install 4way couplers in the direction as shown. Use set screws placement as reference.

It is recommended to use helicopter collective bracket as stand alone unit, however fighter jet throttle can be installed at the same time.



Install back leveling feet, tighten all knobs and bolts. If necessary re-align all parts to keep framework square and plumb.

⚠ Coupler can be installed in front or behind T-extension brackets depending on personal preference of arm reach to controls.

Use either long or short arm of lower L bracket depending on height position preference.

Turn upper L bracket for stick and throttle pointing sideways (default), forward (+3" reach) or backwards (-3" reach).





Follow previous installation instructions for collective control with short tube mounted to lower side/rear 4way coupler.

⚠ **Install 4way coupler in reverse to bring collective closer to seat.**



Install throttle lower L bracket to front 4way coupler. Install upper L bracket with plate and throttle to lower L bracket. Make final adjustments. Ensure all set screws, bolts and knobs are tight.



Specifications:

Recliner: max: 170 degrees
Construction: tubular steel frame with elastic strap supports
Seat Materials: high-density cold cure foam filling; Fabric, Steel chassis

Instructions during use and care:

Move simulator around with caution to avoid collision.
Keep out of direct sunlight and outdoor use.
Watch fingers when adjusting recliner.
Placing heavy or sharp objects on the seat may damage the surface material.
Do not use abrasive or chemically aggressive materials on the seat.
Use dry cloth or soft brush to clean the chair.

Dimensions:



Warranty Information

Return Policy

Terms And Conditions

http://homeracer.com/ow-termsandconditions.html













