Flight Simulator Add-on Kit

Configuration #10

Advanced Modular Side Mount "AMSM"

And

Optional Accessories



Assembly instruction manuals available at:

http://bit.ly/ow-manuals

V2.4 070926

by SimFab®

If your item is damaged, defective or missing parts, please contact us first directly at Email: info@SimFab.com or
Toll Free: 1-888-299-2746

As the manufacturer, our knowledge of your new product ensures that we will be able to assist you promptly and accurately.

For invoices and other price information, please refer to your market place account for more details. Alternatively, you can always email us at info@SimFab.com

WARNINGS:



Proceed with caution and extra attention when warning signs are present during installation instructions manual.







Table of Contents

Parts list.....4
Installation, hardware pre-installation.....6
Side rail to seat frame installation.....8
Take off / combat panel assembly.....9

WinWing Super Taurus throttle installation.....11
Adjustments.....12
VirPil control panels #1 and #2 installation.....15

Cable management and breaking apart cockpit for storage or moving it away.....16
Specifications, Warranty, Terms and Conditions.....18

Parts list

1. Side main rail
2. T-extension bar (2)
3. Short lower L bracket (2)
4. Upper L bracket (2)
5. 4way coupler (2)
6. Upright post
7. Vertical bar
8. Take off / combat ready plate assembly
9. VirPil control panel plate behind throttle
10. Winwing Super Taurus throttle long mount bracket tabs (2)
11. Winwing Super Taurus throttle short mount bracket tabs (2)
12. Hardware

A. Large quick release knobs (5)

B. Small quick release knobs (7)

C. Felt pads (4)

D. Cable management tie wraps (12)

E. M10x12mm set screws (10)

F. WinWing Super Taurus mounting hardware:

M6x45mm bolts (4), M6x10mm bolts (8), Wide washers (12)

G. WinWing take off / combat ready panels mounting hardware

M5x10mm bolts (4), M5 wide washers (4)

H. VirPil control panel #1 & #2 mounting hardware

M5x14mm bolts (8)

I. Control panel behind throttle, plate to upper L bracket mounting hardware

J. WinWing Pilot Take Off Panel V2 (PTO2) hardware

M5x20mm countersink bolts (4), 10mm nylon spacers (4)

M6x50mm bolts (2), washers (2), lock washers (2), nuts (2) (not illustrated)

Required tools included in base package SimFab cockpit, not included in this kit

1. 17mm open wrench 2. 10mm open wrench 3. 8mm Allen key

4. 5mm Allen key 5. 4mm Allen key

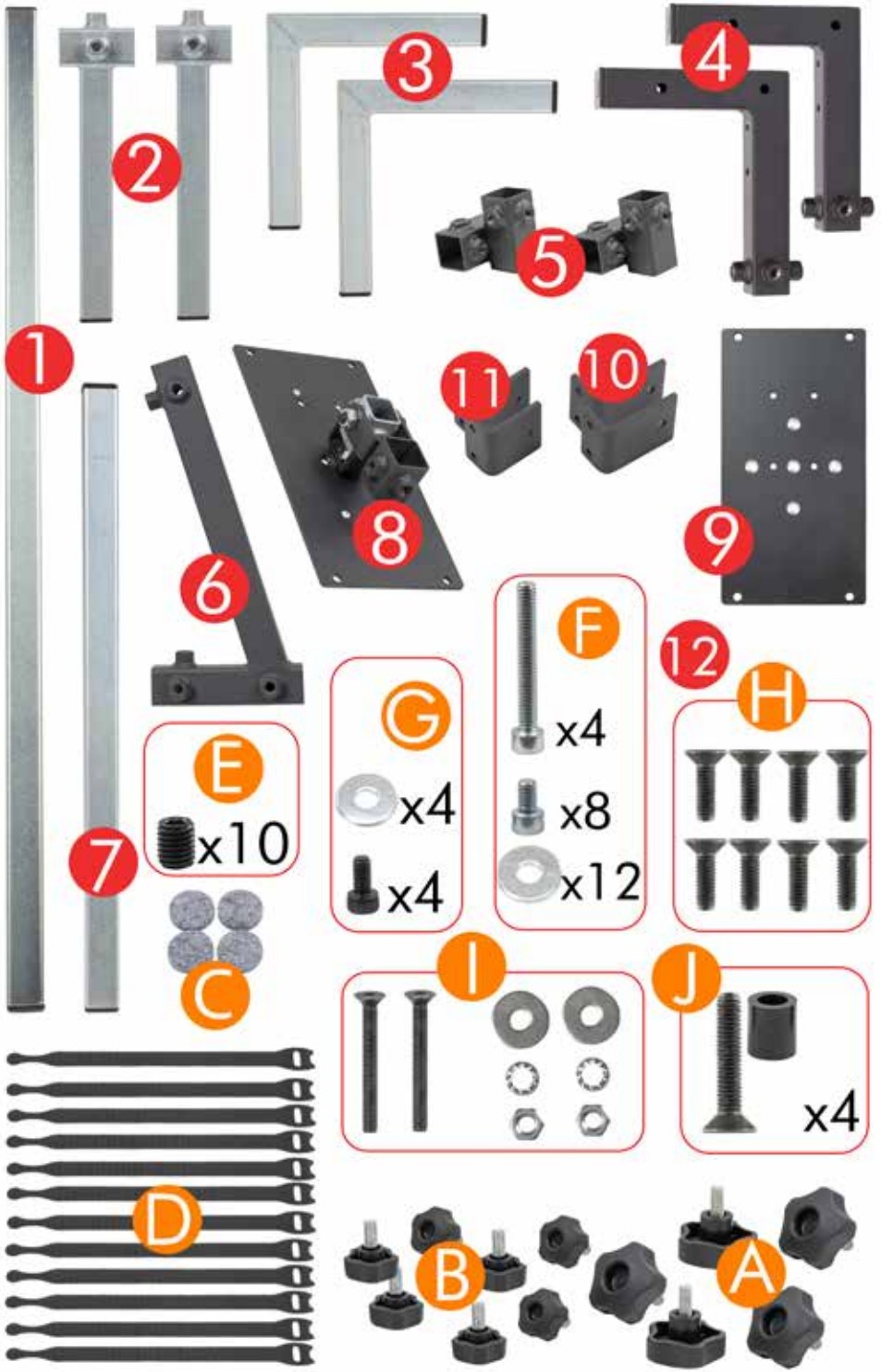

Installation

1. Hardware pre-intsallation by hand.

1.1. Pry out seat frame left side end caps and replace bolts with small knobs located on top welded nuts.

⚠ Adjacent side bolt is not necessary.



1.2. Stick felt pads to bottom/center surface of T-extension bars and pair to bottom surface to each end of upright post.

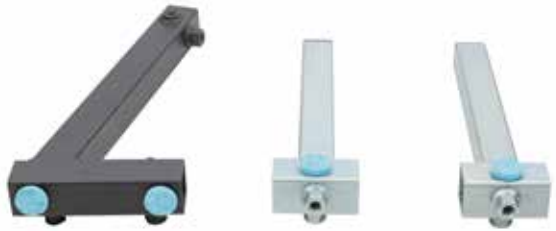

1.3. Install small knobs to top welded nuts of T-extension bars, small knobs to lower and upper sides of upright post, large knobs to post front welded nuts.



1.4. pre-install couple turns in all set screws: 4 to each 4way coupler, 2 to take off/combat panel, plate assembly pivoting adapter.



2. Slide parts to side rail in the following order:

1: T-extension, 2: 4way couple, 3: T-extension, 4: 4way coupler.

⚠ Ensure 4way couplers are installed in the direction as shown. Leave all knobs and set screws loose.

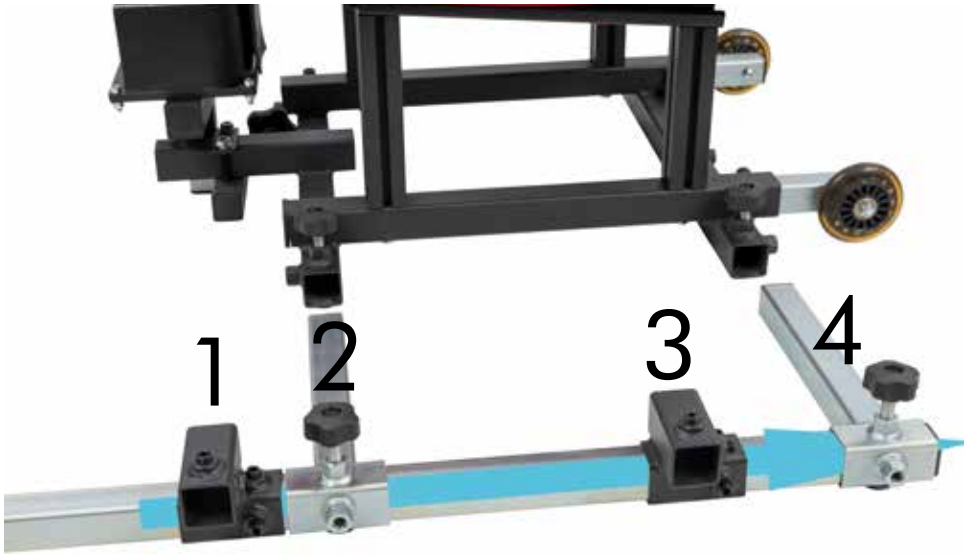

3. Installation and alignment of side rail assembly.

A. Slide T-extensions to seat frame.

B. Align side rail tube rear end cap with edge of rear T-extension. Adjust front 4way coupler next to front T-extension.

C. Measure equal distance at front and rear T-extensions and ensure parallel relation between side rail and seat frame.

D. Tighten down knobs on T-extensions to side rails.

E. Tighten down pair of set screws on front 4way coupler to side rail.

⚠ Leave all rest hardware loosen, detach side assembly from seat frame, and continue with assemblies on it.



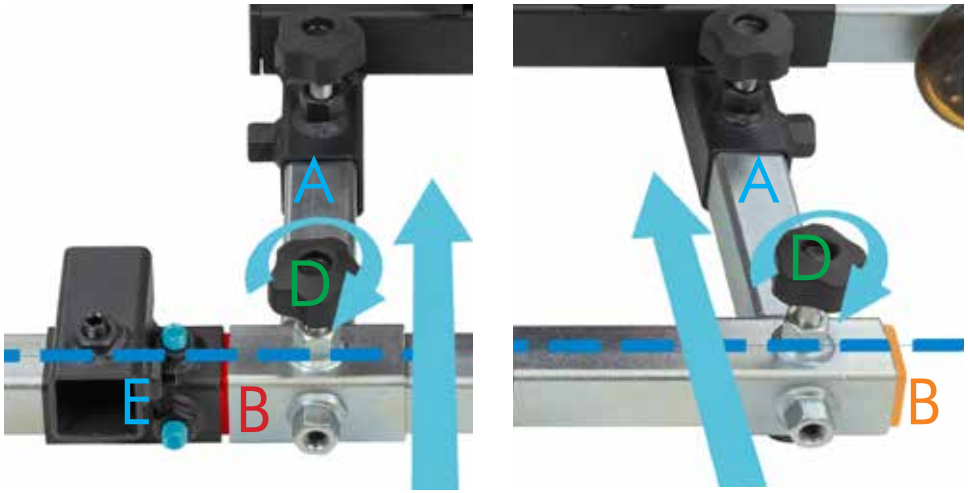

4. Slide lower L brackets all the way into 4way couplers and tighten both pairs of set screws securing L brackets to couplers.

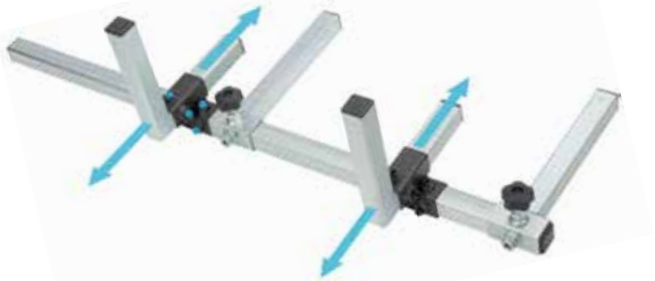

5. Slide upright post to side rail front end and tighten lower large knob first, then pair of lower/side small knobs second.
⚠ Do not over tighten knobs to avoid damage.



6. Slide vertical bar to post and tighten large knob first, small side knob second.
⚠Do not over tighten knobs to avoid damage.



7. Install WinWing take off/ combat panels to plate by using included M5 bolts and washers.
⚠ Do not over tighten controls mounting bolts to avoid stripping controls insert riv-nuts.



8. Slide take off/combat panel to vertical bar at top end and tighten pivoting bracket set screws



9. WinWing Super Taurus throttle installation

9.1. Pre-mount all four bracket tabs to WinWing Super Taurus throttle by using M6x10mm bolts and washers.

Short tabs are on inside of throttle, longer tabs on the outside of throttle.

Tabs point opposite direction of seat.

⚠ Leave hardware loose. Bolts heads point the accessible side of throttle.

9.2. Mount upper L brackets to bracket tabs by using 45mm bolts. Upper L brackets point towards seat.

⚠ Leave hardware loose.

9.3. Pre-install Large knob

Above three steps illustrate rear side of throttle. Same steps apply on front side with mirrored relation.





10. Adjust rear 4way coupler distance and slide down upper L brackets to lower L brackets all the way down.

10.1. Ensure both upper L brackets are vertical to main rail and parallel to each other.

10.2. Tighten down all hardware holding upper L brackets and tabs to throttle control. Total of 6 bolts in front and 6 at the rear side of throttle.





10.3. Tighten both large knobs on upper L brackets to lower L bracket.

10.4. Tighten rear 4way coupler pair set screws to side rail.



14. Throttle adjustment

Throttle adjustment process takes one direction at the time to maintain squareness and plumbness of all brackets.
14.1 To adjust height of throttle loosen the two large quick release knobs.
14.2. To adjust arm reach distance of throttle (fore and aft) loosen pair of set screws of 4way couplers secured to side rail
13.3 To adjust side distance, either loosen pair of set screws on each 4way coupler secured to lower L brackets or slide in/out T-extensions to seat frame.

15. Take off/combat panel adjustment

15.1. Slide post to side rail for arm reach.
15.2. Slide pivoting adapter up and down on vertical bar for height adjustment
15.3. Adjust articulating arm by turning plate on its center bolt, tilt or side turn. Tighten or loosen articulating bolts and nuts for tighter or looser motion if necessary.

16. Slide side rail assembly back to seat frame. Ensure parallel relation between seat frame and side rail. Tighten small quick release knobs on seat frame side.



17. Virpil Control panels #1 and #2 installation

Mount front 4way coupler between T-extensions. Add 2nd knob to rear L bracket holding VirPil control panel. Adjust plates close to each other. Install VirPil control panel on take off/ combat ready plate by using included hardware. Refer to assembly manual configuration #2 for mounting VirPil controls to plates.

⚠ Do not over tighten controls mounting bolts to avoid stripping controls insert riv-nuts.

Refer to page 34 with general adjustments to make final adjustments.



18. Use included Velcro tie wraps to manage cables neatly around tubes and out of the way.



19. To break down, store away or move your SimFab flight pit, disconnect each peripheral modules/attached brackets at easiest breaking points as shown.



Specifications:

Recliner: max: 170 degrees
Construction: tubular steel frame with elastic strap supports
Seat Materials: high-density cold cure foam filling; Fabric, Steel chassis

Instructions during use and care:

Move simulator around with caution to avoid collision.
Keep out of direct sunlight and outdoor use.
Watch fingers when adjusting recliner.
Placing heavy or sharp objects on the seat may damage the surface material.
Do not use abrasive or chemically aggressive materials on the seat.
Use dry cloth or soft brush to clean the chair.

Dimensions:



Warranty Information

Return Policy

Terms And Conditions

http://homeracer.com/ow-termsandconditions.html













